Power Units

		Page
(M) = Mobile (I) = Industrial (B) = Mobile & Industrial		
(I)	D-Pak 5 Gallon 0.9 - 2.7 GPM	143-144
(I)	H-Pak 10-40 Gallon, 0.9 - 9.6 GPM	145-152
(I)	V-Pak 10-40 Gallon, 2 - 15.6 GPM	145-152
(I)	V-Pak Low Profile 80 Gallon, 15-36 GPM	145-152

Parker

ENGINEERING YOUR SUCCESS.

Power Units (Industrial)

D-Pak 5 Gallon

D-Pak style power units are ideal for many industrial applications. The space saving vertical style units are available with gear pumps and are designed for quiet and leak-free operation. Standard Parker filtration on each unit will help ensure a long service life.

Power Unit Performance Data

Model Series	Tank (Gal)	Pump Flow, GPM (LPM) @ 1725 RPM	Electric Motor HP (KW)	Maximum Pressure PSI (BAR)
D-Pak	5	0.9 - 2.7 (3.4 - 10.2)	0.5 - 3 (0.37 - 2.24)	3000 (210)

Markets	Applications
Industrial	Presses, Shears, Test Equipment, Simulators

Features

- Vertical design
- Submerged pump
- Spare return ports
- Precision pump mounting adapters
- Suction strainer
- Glycerine filled pressure gage with shut off
- Oil level gage with thermometer
- Relief valve
- Breather and fill cap
- SAE drain plug
- Parker connector technology

Benefits

- Saves floor space
- Quieter operation, elimination of potential leak point
- Longer pump life
- Protects pump from contamination
- Improved diagnostics
- Helps to maintain trouble-free performance
- Protects against system shock
- Easy to fill reservoir
- Prevents leaks

TOP VIEW

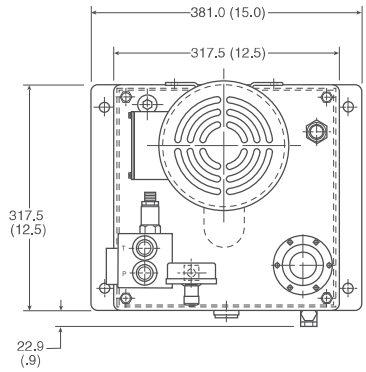

FRONT VIEW

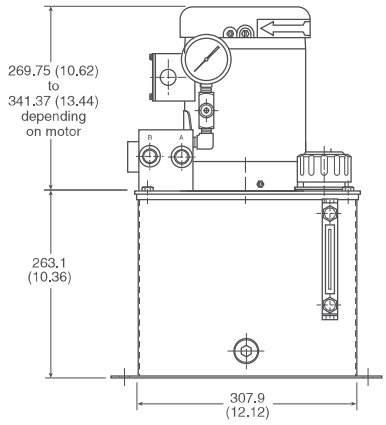

* Stainless units & other options available on request

Power Units
D-Pak Model Ordering Code

D5			W					P	
Reservoir 18.9 Liters (5 Gal)	Pressure Control	Pump Flow	No Motor (See Note) **	Electric Motor	Manifold	Directional Control Valve	*Manapak Control Valves		Options and Accessories

Code	Pressure Control
Omit	System Pressure Relief Valve Only
B	System Pressure Relief Valve with Unloading Valve (2-Way 120VAC) N.O. (Energize coil to close)
J	System Pressure Relief Valve with Unloading Valve (2-Way 24VDC) N.O. (Energize coil to close)

Code	Pump Flow Used
0.9	331-9110-267
1.3	331-9110-011
1.8	331-9110-010
2.7	331-9110-101

Code	Electric Motor Description HP (KW) - RPM - Frame - Phase
U1	.5 (.37) - 1725 - 56 C - 1
T1	1 (.75) - 1725 - 56 C - 1
T3	1 (.75) - 1725 - 56 C - 3
G	2 (1.5) - 1725 - 56 C - 3
K	3 (2.2) - 1725 - 56 C - 3

Single phase electric motors are rated as follows:
115/230V, 1PH, TEFC - 60 Hz 1800 RPM

Three phase electric motors are rated as follows:
200-230/460V, 3PH, TEFC - 60 Hz 1800 RPM

Consult factory for other motor speeds (RPM) and voltages.

**Use W prefix when no motor is required on unit. When ordering, W must be followed by motor model code equivalent. Motor coupling will have interface for a 56C frame motor.

Code	Porting Block/Subplate or Manifold Type	Supply/Return Port or Actuator Port Size	Other
O	Pressure and Return Port Block with Safety Relief Valve	P & T Ports SAE-10 Str. Thr'd	Convertible to S3 Option
S3	D03 Single Station Subplate with Safety Relief Valve	A & B Ports SAE-8 Str. Thr'd	Spare P & T SAE-10 Ports
M33	D03 Multistation Parallel Circuit Manifold with Safety Relief Valve	A & B Ports SAE-8 Str. Thr'd	Spare G Port SAE-6

Manifolds are mounted vertically. Bottom station is number 1.

Code	Directional Control Valve Model Number	NFPA Mounting Pad	Nominal Flow GPM (LPM)	Description	Circuit Symbol
B	D1VW001CN***	D03	7 (26.5)	Double (Spr. Ctr)	
C	D1VW004CN***	D03	7 (26.5)	Double (Spr. Ctr)	
T	D1VW008CN***	D03	7 (26.5)	Double (Spr. Ctr)	

Units less valves will be supplied with station cover plates installed.

Code	Manapak Control Valves Function	Valve Model Number	NFPA Mounting Pad	Nominal Flow GPM (LPM)	Circuit Symbol
1	Flow Control Meter-Out	FM2DDKN	D03	7 (26.5)	
3	Pilot Operator Check	CPOM2DDN	D03	7 (26.5)	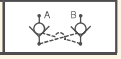

Manapak valves mounted in order of callout.
First valve will be nearest DCV; last valve will be on manifold.

Code	Options and Accessories		
	Function	Model Number	Technical Data
B1*	Exchanger	RM-08-2-2	Air/Oil: 0.7 HP (52 kW) Rej. @ 3 GPM (11.4 LPM)
H	Pressure Filter	15P110QXRS	Microglass II Element Vis. Ind. – 50 PSI (3.4 bar) Bypass – 2 PSI (0.14 bar) Diff. @ 3 GPM (11.4 LPM)
K	Check Valve Pump Outlet	DT370MOMF05	5 PSI (0.34 bar) Cracking Pressure 7 PSI (0.48 bar) Diff. @ 3 GPM (11.4 LPM)
L	Bypass Check (on Heat Exch)	C1020S65	65 PSI (4.5 bar) Cracking Pressure
O	Return Filter	12AT10C 45LPM (12 GPM)	Cellulose Element Ind. Gage - 15 PSI (1.03 bar) Bypass Max. Oil Flow
R1	Combination Float/Temp. Switch N.O. Float Up	8767820-1	Fixed Temp at 65°C (149°F) Close @ Low Level and/or 65°C (149°F) (N.O.)
R2	Combination Float/Temp. Switch Float Up	876782-02	Fixed Temp at 65°C (149°F) Open @ Low Level and/or 65°C (149°F) (N.C.)

*Heat rejection based on flow given with a 40°F differential between transfer medium.

= Omit if not required

Power Units

H-Pak & V-Pak

V-Pak Low Profile

H-Pak and V-Pak style power units are ideal for many industrial applications. These space saving vertical style units are available with gear or piston pumps and are designed for quiet and leak-free operation. Standard Parker filtration on each unit will help ensure a long service life. Also available in V-Pak Low Profile.

Performance Data

Model Series	Tank (Gal)	Pump Flow, GPM (LPM) @ 1725 RPM	Electric Motor HP (KW)	Max. Pressure PSI (BAR)
H-Pak	10, 20, 30, 40	0.9 - 9.6 (2.2 - 36.3)	0.5 - 20 (0.37 - 14.9)	3000 (210)
V-Pak	10, 20, 30, 40	2.0 - 15.6 (7.6 - 59.1)	2 - 20 (1.4 - 14.9)	3000 (210)
V-Pak Low Profile	80	36.1 (136.7)	7.5 - 40 (5.6 - 30)	3000 (210)

Markets	Applications
Industrial	Presses, Shears, Test Equipment, Simulators

* Stainless units & other options available on request

H-Pak and V-Pak

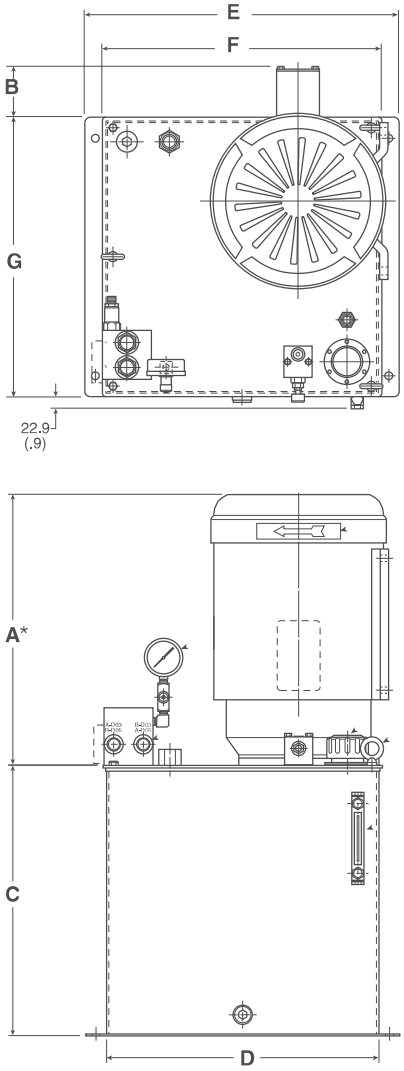

Low Profile V-Pak

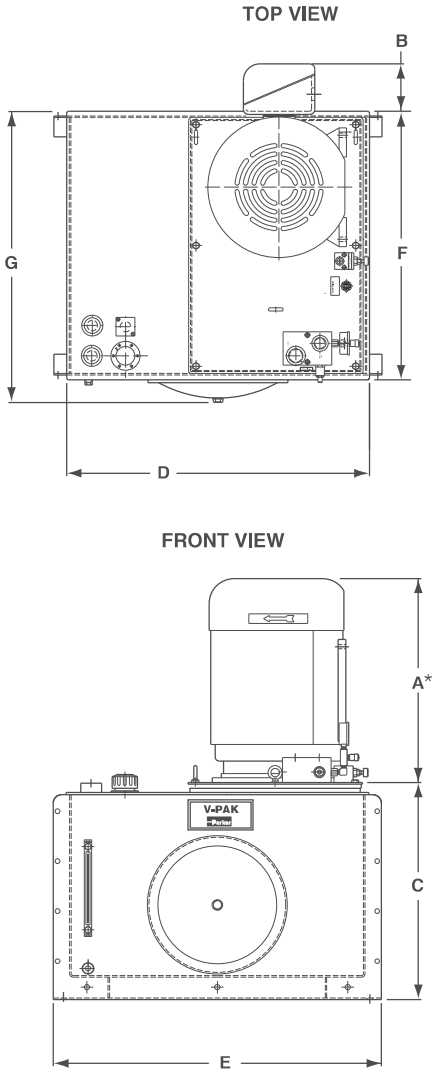

Dimensions, inch (mm)

Series	H1/V1	H2/V2	H3/V3	H4/V4	V8
A*†	10.5 (267) to 16.3 (414)	10.5 (267) to 19.3 (492)	11.8 (298) to 19.3 (492)	11.8 (298) to 19.3 (492)	16.6 (451) to 24.7 (627)
B*	0.8 (19) 2.6 (67)	0.8 (19) to 3.4 (85)	0.8 (19) to 3.4 (85)	0.8 (19) to 3.4 (85)	1.88 (48) to 5.7 (144)
C	15.4 (390)	19.4 (492)	23.6 (600)	28.9 (733)	28.6 (725)
D	16.1 (410)	19.5 (495)	19.5 (495)	19.5 (495)	36.0 (914)
E	19.0 (483)	22.5 (572)	22.5 (572)	22.5 (572)	39.0 (991)
F	16.6 (422)	20.0 (508)	20.0 (508)	20.0 (508)	32.3 (819)
G	16.6 (422)	20.0 (508)	20.0 (508)	20.0 (508)	34.6 (879)

*Depending on motor option
†Reference dimensions consult factory if critical to application

Power Units
H-Pak Model Ordering Code

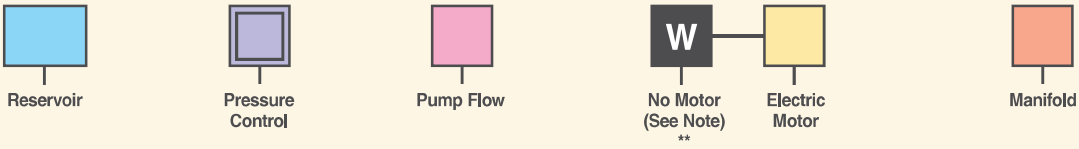

Code	Reservoir Size Gallons (Liters)
H1*	10 (37.9)
H2	20 (75.7)
H3	30 (113.6)
H4	40 (151.4)

*Available up to 7.5 KW (10 HP) motor only.

Code	Pressure Control*
Omit	System Pressure Relief Valve Only
B	System Pressure Relief Valve with Unloading Valve (2-Way 120VAC) N.O. (Energize coil to close)
J	System Pressure Relief Valve with Unloading Valve (2-Way 24VDC) N.O. (Energize coil to close)

Code	Pump Flow Used
0.9	331-9110-267
1.3	331-9110-011
1.8	331-9110-010
2.7	331-9110-101
3.2	334-9111-069
4.5	334-9111-068
5.1	334-9111-067
6.3	334-9111-048
9.6	334-9111-065

Code	Electric Motor Description HP (KW) - RPM - Frame - Phase
U1*	.5 (.37) - 1725 - 56C - 1
T1	1 (.75) - 1725 - 56C - 1
T3	1 (.75) - 1725 - 56C - 3
G	2 (1.5) - 1725 - 56C - 3
K	3 (2.2) - 1725 - 56C - 3
L	5 (37.5) - 1725 - 184TC - 3
M	7.5 (5.6) - 1725 - 213TC - 3
N	10 (7.5) - 1725 - 215TC - 3
P †	15 (11.2) - 1725 - 254TC - 3
S †	20 (14.9) - 1725 - 256TC - 3

* U1 leadtime is 2 weeks

Single phase electric motors are rated as follows:
115/230V, 1PH, TEFC - 60 Hertz 1800 RPM

Three phase electric motors are rated as follows:
208-230/460V, 3PH, TEFC - 60 Hertz 1800 RPM

Consult factory for other motor speeds (RPM) and voltages.

†Available with H2, H3 and H4 tanks only.

** Use W prefix when no motor is required on unit. When ordering, W must be followed by motor model code equivalent to frame size of motor to be used.

Code	Porting Block/Subplate or Manifold Type	Supply/Return Port or Actuator Port Size	Other
O	Pressure and Return Port Block with Safety Relief Valve	P & T Ports SAE-10 Str. Thr'd	Convertible to S3 Option
S3	D03 Single Station Subplate with Safety Relief Valve	A & B Ports SAE-8 Str. Thr'd	Spare P & T SAE-10 Ports
S5	D05 Single Station Subplate with Safety Relief Valve	A & B Ports SAE-10 Str. Thr'd	Spare P & T SAE-12 Ports
M33 M35	D03 Multistation Parallel Circuit Manifold with Safety Relief Valve	A & B Ports SAE-8 Str. Thr'd	Spare G Port SAE-6
M53 M55	D05 Multistation Parallel Circuit Manifold with Safety Relief Valve	A & B Ports SAE-8 Str. Thr'd	Spare G Port SAE-6

Manifolds are mounted vertically. Bottom station is number 1.

= Omit if not required

Power Units
H-Pak Model Ordering Code

Code	Valve Model Number	NFPA Mounting Pad	Nominal Flow GPM (LPM)	Description	Circuit Symbol
B	D1VW001CN***	D03	7 (26.5)	Double (Spr. Ctr)	
C	D1VW004CN***	D03	7 (26.5)	Double (Spr. Ctr)	
F	D3W1CN**	D05	20 (75.7)	Double (Spr. Ctr)	
G	D3W4CN**	D05	15 (56.8)	Double (Spr. Ctr)	
T	D1VW008CN***	D03	7 (26.5)	Double (Spr. Ctr)	
W	D3W8CN**	D05	15 (56.8)	Double (Spr. Ctr)	

Units less valves wil be supplied with station cover plates installed.

Code	Function	Valve Model Number	NFPA Mounting Pad	Nominal Flow GPM (LPM)	Circuit Symbol
1	Flow Control	FM2DDKN	D03	7 (26.5)	
2	Flow Control	FM3DDKN	D05	12 (45.4)	
3	Pilot Operator Check	CPOM2DDN	D03	7 (26.5)	
4	Pilot Operator Check	CPOM3DDN	D05	12 (45.4)	

*Manapak valves mounted in order of callout.
First valve will be nearest DCV; last valve will be on manifold.

Code	Function	Model Number	Technical Data
B1*	Return Heat Exchanger	RM-08-1-2	Air/Oil: .7 HP (0.52 kW), Rej. @ 7 GPM (26.5 LPM) 0.37 - 3.7 kW Motors only
B2*	Return Heat Exchanger	RM 190-1-2	Air/Oil: 1.5 HP (1.1 kW), Rej. @ 7 GPM (26.5 LPM) 5.6 - 11.2 kW Motors only
H	Pressure Filter	15P110QXRS	Microglass II Element, Vis. Ind. - 50 PSI (3.49 bar) Bypass - 4 PSI (0.27 bar), Diff. @ 7 GPM (26.5 LPM)
K	Check Valve Pump Outlet	"DT" & "C" Series	5 PSI (0.34 bar) Cracking Pressure 25 PSI (1.72 bar) Diff. @ 15 GPM (56.8 LPM)
L	Bypass Check (on Heat Exch)	C1220S65	(65 PSI) 4.5 bar Cracking Pressure
O	Return Filter	12AT10C 12 GPM (45 LPM)	Cellulose Element, Ind. Gage - 15 PSI (1.03 bar) Bypass
R1	Combination Float/Temp. Switch N.O. Float Up	876782-01	Fixed Temp at 65°C (149°F) Close @ Low Level and/or 65°C (149°F) (N.O.)
R2	Combination Float/Temp. Switch Float Up	876782-02	Fixed Temp at 65°C (149°F) Open @ Low Level and/or 65°C (149°F) (N.C.)

*Heat rejection based on flow given with a 40°F differential between transfer medium.

= Omit if not required

Power Units
V-Pak Model Ordering Code

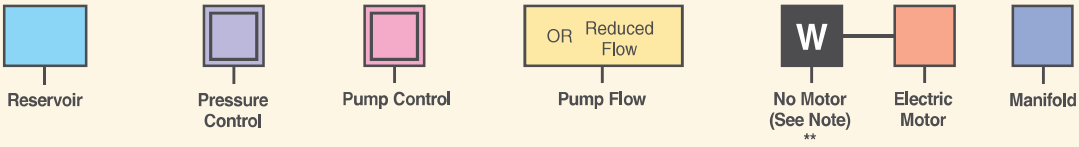

Code	Reservoir Size Gallons (Liters)
V1*	10 (37.9)
V2	20 (75.7)
V3	30 (113.6)
V4	40 (151.4)

*Available up to 10 HP (7.5 kW) motor only.

Code	Pressure Control
Omit	Single Pressure Remote Compensator
B	Single Pressure Remote Compensator with Low Pressure Standby
BJ	Single Pressure Remote Compensator with Low Pressure Standby, 24 VDC
C	Bi-Pressure Remote Compensator
CJ	Bi-Pressure Remote Compensator, 24VDC
D	Bi-Pressure Remote Compensator with Low Pressure Standby
DJ	Bi-Pressure Remote Compensator with Low Pressure Standby, 24VDC
F	Provision for Customer Supplied Remote Control Relief Valve

Code	Pump Control
Omit	Std. Remote Compensator
A*	Load Sense Flow Control
H**	Horsepower Limiting

*A_SAE-6 sense port line will be supplied in topplate.

** Horsepower setting will be at max. flow & pressure obtainable with motor selected. Lead time is four weeks for shaded items.

Code	Pump Flow Rate @1800 RPM	Pump Used and Description
7	7 GPM (29.5 LPM)	PVP16 - Std. Remote Compensator
*	Specify in GPM	Destroked Max. Volume – 2 GPM Min.
15	15.6 GPM (59 LPM)	PVP33 - Std. Remote Compensator
**	Specify in GPM	Destroked Max. Volume – 8 GPM Min.

*Unless otherwise specified, units are shipped at max. flow rate 7.8 GPM (29.5 LPM) at 1800 RPM. When reduced flow setting is required, specify pump setting in .5 GPM (1.9 LPM) increments. Example: 5, 5.5, 6, 6.5 with a 2 GPM (7.6 LPM) minimum flow.

**Unless otherwise specified, units are shipped at max. flow rate 15.6 GPM (59 LPM) at 1800 RPM. When reduced flow setting is required, specify pump setting in .5 GPM (1.9 LPM) increments. Example: 11, 11.5, 12, 12.5 with a 8 GPM (30.3 LPM) minimum flow.

Example: V*12**-- = Std. Pump Destroked to 12 GPM (45.4 LPM)
V*A11.5**-- = Load Sense Pump Destroked to 11.5 GPM (43.5 LPM)

Code	Electric Motor Description HP (KW) - RPM - Frame - Phase
G	2 (1.5) - 1725 - 56C - 3
K	3 (2.2) - 1725 - 56C - 3
L	5 (37.5) - 1725 - 184TC - 3
M	7.5 (5.6) - 1725 - 213TC - 3
N	10 (7.5) - 1725 - 215TC - 3
P †	15 (11.2) - 1725 - 254TC - 3
S †	20 (14.9) - 1725 - 256TC - 3

Electric motors are 208-230/460V, 60 Hz 3PH 1800 RPM TEFC. Consult factory for other motor speeds (RPM) and voltages.

†Available with V2, V3 and V4 tanks only.

** Use W prefix when no motor is required on unit. When ordering, W must be followed by motor model code equivalent to frame size of motor to be used.

Code	Porting Block/Subplate or Manifold Type	Supply/Return Port or Actuator Port Size	Other
O	Pressure and Return Port Block with Safety Relief Valve	P & T Ports SAE-10 Str. Thr'd	Convertible to S3 Option
S3	D03 Single Station Subplate with Safety Relief Valve	A & B Ports SAE-8 Str. Thr'd	Spare P & T SAE-10 Ports
S5	D05 Single Station Subplate with Safety Relief Valve	A & B Ports SAE-10 Str. Thr'd	Spare P & T SAE-12 Ports
M33 M35	D03 Multistation Parallel Circuit Manifold with Safety Relief Valve	A & B Ports SAE-8 Str. Thr'd	Spare G Port SAE-6
M53 M55	D05 Multistation Parallel Circuit Manifold with Safety Relief Valve	A & B Ports SAE-8 Str. Thr'd	Spare G Port SAE-6

Manifolds are mounted vertically. Bottom station is number 1.

= Omit if not required

Power Units
V-Pak Model Ordering Code

continued on next page

Directional Control Valve

*Manapak Control Valves

P — Options and Accessories

Code	Directional Control Valve Model Number	NFPA Mounting Pad	Nominal Flow GPM (LPM)	Description	Circuit Symbol
B	D1VW001CN***	D03	7 (26.5)	Double (Spr. Ctr)	
C	D1VW004CN***	D03	7 (26.5)	Double (Spr. Ctr)	
F	D3W1CN**	D05	20 (75.7)	Double (Spr. Ctr)	
G	D3W4CN**	D05	15 (56.8)	Double (Spr. Ctr)	

Units less valves wil be supplied with station cover plates installed.

Code	Manapak Control Valves Function	Valve Model Number	NFPA Mounting Pad	Nominal Flow GPM (LPM)	Circuit Symbol
1	Flow Control	FM2DDKN	D03	7 (26.5)	
2	Flow Control	FM3DDKN	D05	12 (45.4)	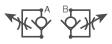
3	Pilot Operator Check	CPOM2DDN	D03	7 (26.5)	
4	Pilot Operator Check	CPOM3DDN	D05	12 (45.4)	

*Manapak valves mounted in order of callout.
First valve will be nearest DCV; last valve will be on manifold.

Code	Options and Accessories		
	Function	Model Number	Technical Data
A*	Pump Case Heat Exchanger	RM-08-4-2	Air/Oil: 0.7 HP (0.52 kW), Rej. @ .5 GPM (1.9 LPM) 2-15 HP (1.5 - 11.2 kW) Motors
B1*	Return Heat Exchanger	RM-08-1-2	Air/Oil: 0.7 HP (0.52 kW), Rej. @ 7 GPM (26.5 LPM) 2-5 HP (1.5 - 3.7 kW) Motors only
B2*	Return Heat Exchanger	RM 190-1-2	Air/Oil: 1.5 HP (1.1 kW), Rej. @ 7 GPM (26.5 LPM) 7.5-15 HP (5.6 - 11.2 kW) Motors only
H	Pressure Filter	15P110QXRS	Microglass II Element, Vis. Ind. - 50 PSI (3.49 bar) Bypass - 4 PSI (0.27 bar), Diff. @ 7 GPM (26.5 LPM)
K	Check Valve Pump Outlet	"DT" & "C" Series	5 PSI (0.34 bar) Cracking Pressure 25 PSI (1.72 bar) Diff. @ 15 GPM (56.8 LPM)
L	Bypass Check (on Heat Exch)	C1220S65	(65 PSI) 4.5 bar Cracking Pressure
N	Return Filter	40CN110B	Microglass II Element, Visual 25 PSI (1.72 bar) Indicator 3 PSI (0.21 bar) Diff. @ 7 GPM (26.5 LPM)
O	Return Filter	12AT10C 12 GPM (45 LPM)	Cellulose Element, Ind. Gage - 15 PSI (1.03 bar) Bypass
R1	Combination Float/Temp. Switch N.O. Float Up	876782-01	Fixed Temp at 65°C (149°F) Close @ Low Level and/or 65°C (149°F) (N.O.)
R2	Combination Float/Temp. Switch Float Up	876782-02	Fixed Temp at 65°C (149°F) Open @ Low Level and/or 65°C (149°F) (N.C.)

*Heat rejection based on flow given with a 40°F differential between transfer medium.

= Omit if not required

Power Units

V-Pak Model Ordering Code

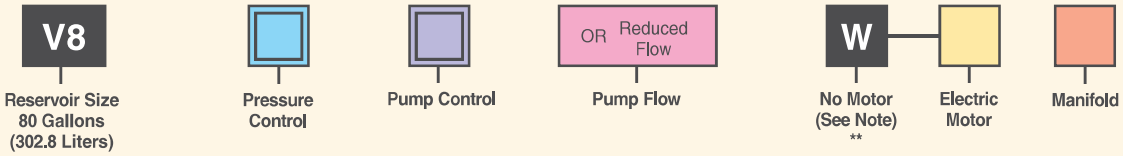

Code	Pressure Control
Omit	Single Pressure Remote Compensator
B	Single Pressure Remote Compensator with Low Pressure Standby
BJ	Single Pressure Remote Compensator with Low Pressure Standby, 24 VDC
C	Bi-Pressure Remote Compensator
CJ	Bi-Pressure Remote Compensator, 24VDC
D	Bi-Pressure Remote Compensator with Low Pressure Standby
DJ	Bi-Pressure Remote Compensator with Low Pressure Standby, 24VDC
F	Provision for Customer Supplied Remote Control Relief Valve

Code	Pump Control
Omit	Std. Remote Compensator
A*	Load Sense Flow Control

*Unless otherwise specified, a SAE-6 37° flared port will be supplied for customer connection.

**Consult factory for horsepower and hi-lo pump control options. Lead time is four weeks.

Code	Pump Flow Rate @1800 RPM	Pump Used and Description
15	15.6 GPM (59 LPM)	PVP33 - Std. Remote Compensator
23	23.0 GPM (87 LPM)	PVP48 - Std. Remote Compensator
36	36.1 GPM (137 LPM)	PVP76 - Std. Remote Compensator
*	Specify in GPM	Destroked (Reduced) Flow

*Unless otherwise specified, units are shipped at max. flow rate (GPM) at 1800 RPM.
When reduced flow setting is required,
Reduced flows from 22.5 to 8.0 GPM (85.2 to 30.3 LPM), specify in 0.5 GPM increments.
Reduced flows from 35.0 to 24.0 GPM (132.5 to 90.8 LPM), specify in 1.0 GPM (3.8 LPM) increments.
Example: V*9.5**-- = PVP33 Pump destroked to 9.5 GPM (36.0 LPM)
V*A31**-- = PVP76 Load Sense Pump destroked to 31.0 GPM (177.3 LPM)

Code	Electric Motor Description HP (kW) - RPM - Frame - Type
M	7.5 (5.6) - 1800 - 213TC - TEFC
N	10 (7.5) - 1800 - 215TC - TEFC
P	15 (11.2) - 1800 - 254TC - TEFC
S	20 (14.9) - 1800 - 256TC - TEFC
Q	25 (18.6) - 1800 - 284TC - TEFC
R	30 (22.4) - 1800 - 286T - TEFC
V	40 (29.8) - 1800 - 324T - TEFC

Electric motors are 230/460V, 60 Hz 3PH. Consult factory for other motor speeds (RPM) and voltages.

**Use W prefix when no motor is required on unit. When ordering, W must be followed by motor model code equivalent to frame size of motor to be used.

Example: V815WM*** = 302.8 L (80 gal) reservoir, std PVP33 unit to accept a 7.5 HP (5.6KW)/213TC C-face frame motor.

Code	Porting Block/Subplate or Manifold Type	Supply/Return Port or Actuator Port Size	Other
O	Pressure and Return Port Block with Safety Relief Valve	P Port SAE-16 T Port SAE-20	None
S5	D05 Single Station Subplate with Safety Relief Valve	A & B Ports SAE-10 Str. Thr'd	None
M5* (2)	D05 Multistation Parallel Circuit Manifold with Safety Relief and Pump Compensator Valves	A & B Ports SAE-8 Str. Thr'd	None
M82 (3)	D08 Two Parallel Circuit Manifold with Safety Relief and Pump Compensator Valves	A & B Ports SAE-16 Str. Thr'd	Y Port SAE-8 Str. Thr'd

*When ordering Multi-Station Manifolds, the number of stations must be specified. If valves are to be mounted, specify the valves and sequence, if the model code exceeds 25 digits, call factory.

Example: V815QM53BCB1
3 Station D05 Manifold
Station #1: B
Station #2: C
Station #3: B1

Example: V815QM55B1B1CBC
5-Station D05 Manifold
Station #1: B1
Station #2: B1
Station #3: C
Station #4: B
Station #5: C

NOTE:
1. Manifolds are mounted vertically. Bottom station is number 1.
2. M5-3 and 5 station available. M8-2 station available.

= Omit if not required

Power Units
V-Pak Model Ordering Code

Code	Directional Control Valve Valve Model Number	NFPA Mounting Pad	Nominal Flow GPM (LPM)	Description	Circuit Symbol
B	D1VW001CN***	D03	7 (26.5)	Double (Spr. Ctr)	
C	D1VW004CN***	D03	7 (26.5)	Double (Spr. Ctr)	

Code	Manapak Control Valves Function	Valve Model Number	NFPA Mounting Pad	Nominal Flow GPM (LPM)	Circuit Symbol
1	Flow Control	FM2DDKN	D03	7 (26.5)	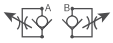
3	Pilot Operator Check	CPOM2DDN	D03	7 (26.5)	

*Manapak valves mounted in order of callout.
First valve will be nearest DCV; last valve will be on manifold.

Code	Options and Accessories		
	Function	Model Number	Technical Data
A*	Continuous Pump Case Cooling	RM-08-2-2	Air/Oil: Max. Oil Flow 4.5 GPM (17 LPM), 0.8 HP (0.6 kW) Heat Rejection
B*	Continuous Pump Case Cooling	RM-19-2-2	Air/Oil: Max. Oil Flow 4.5 GPM (17 LPM) 1.5 HP (1.1 kW) Heat Rejection
C*	Filter/Cooling Loop	ACC-22-2-1PH 40CN205Q	Air Oil w/1 PH Motor: Oil Flow 4.5 GPM (17 LPM), 4.5 HP (3.3 kW) Heat Rejection
H	Pressure Filter	P210QM250NN1	10 Micron Microglass II Dual Element, Mechanical Indicator
K	Check Valve Pump Outlet	493-16-D1-2	5 PSI (0.3 bar) Cracking Pressure
L	Bypass Check	C2020S65	65 PSI (4.6 bar) Cracking Pressure
N	Return Filter	40CN210Q	10 Micron Microglass II Dual Element, Mechanical Indicator** (8 PSID)
QS	Return Filter	80CN110QE2GS24-4	10 Micron Microglass II Single Element Electrical Indicator (25 PSI)
R1	Combination Float/Temp. Switch N.O. Float Up	877501	Fixed Temp at 65°C (149°F) Close @ Low Level and/or 65°C (149°F) (N.O.)
R2	Combination Float/Temp. Switch N.C. Float Up	877502	Fixed Temp at 65°C (149°F) Open @ Low Level and/or 65°C (149°F) (N.C.)

*Heat rejection data is based on 100 SSU oil leaving the cooler 22°C (72°F) higher than the ambient air temperature used for cooling.
Option A available from 7.5 HP (0.6 KW) thru 25 HP (18.5 KW).
Option C not available with option A or B.
**Based on max. 36 GPM (136 LPM) w/150 SUS oil.

= Omit if not required