Handling Products

Handling Products

Comprising an innovative range of Universal Grippers, Rotary Actuators and Precision Slide Tables

Parker is about motion control engineering, manufacturing, application expertise and unparalleled customer service.

Parker automation products are found just about everywhere — from laboratories, cleanrooms and factory floors, to mines, foundries and satellites in space – our products are used anywhere machines, processes and people depend on reliable high-performance motion control.

Today's industrial automation applications demand the best in quality and productivity. Likewise, high-technology automation applications demand performance in quality throughput and precision.

P5GA - Angular double acting, square jaw carriers

The P5GA is a compact angular gripper with a closed angle of -10° and an open angle of +30°. With double acting mechanism the gripper is suitable for internal or external gripping applications. For flexible installation mounting is available on three sides and the anodised body has recessed sensor grooves.

- Bore sizes Ø12, 16, 20, 25 and 32mm
- Double acting
- Anodised corrosion protection
- Magnetic piston as standard
- Optional sensors

Technical Information

Acting type		Double acting				
Bore (mm)		12	16	20	25	32
Port size		M3 x 0.5		M5 x 0.8		
Medium		Air				
Operating pressure range		1.5 - 7 bar				
Temperature range		-5 to +60°C (no freezing)				
Max frequency		180 Cycles/min				
Lubrication	Cylinder	Not required				
Lever	Grease					
Max. arm length mm (L)		30	40	60	70	85
Theoretical holding force kgf-cm						
	Closed side	0.4xP	0.9xP	1.7xP	3.4xP	6.1xP
	Opened side	0.5xP	1.2xP	2.3xP	4.4xP	8.1xP
Clamp / Release angle		-10 to +30°				
Clamping force (F)		F = M / L x 0.85				
Weight (g)		53	103	193	327	525

L : Arm length (mm), M : Theoretical moment (kgf-cm)
F : Clamping force (kgf), P : Operating pressure (kgf/cm²)

For more information see www.parker.com/euro_pneumatic

P5GA - Angular Grippers

Bore mm	Order code
12	**P5GA-012MSG030B**
16	**P5GA-016MSG030B**
20	**P5GA-020MSG030B**
25	**P5GA-025MSG030B**
32	**P5GA-032MSG030B**

Length of gripping point

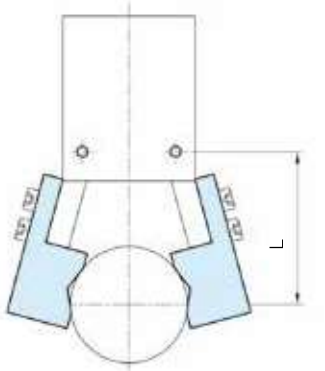

Installation of sensor

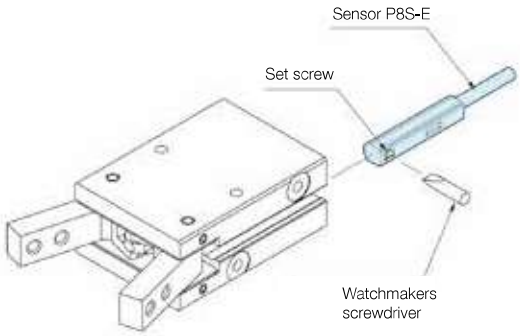

Sensors - Series P8S-E

Magnetic Sensor	M8 - Snap in	Flying lead
	0.165 m PUR cable with M8 connector	2 m PUR cable
PNP	**P8S-EPSUS**	**P8S-EPFXS**
NPN	**P8S-ENSUS**	**P8S-ENFXS**
Reed	**P8S-ERSUS**	**P8S-ERFXS**

Dimensions (mm)

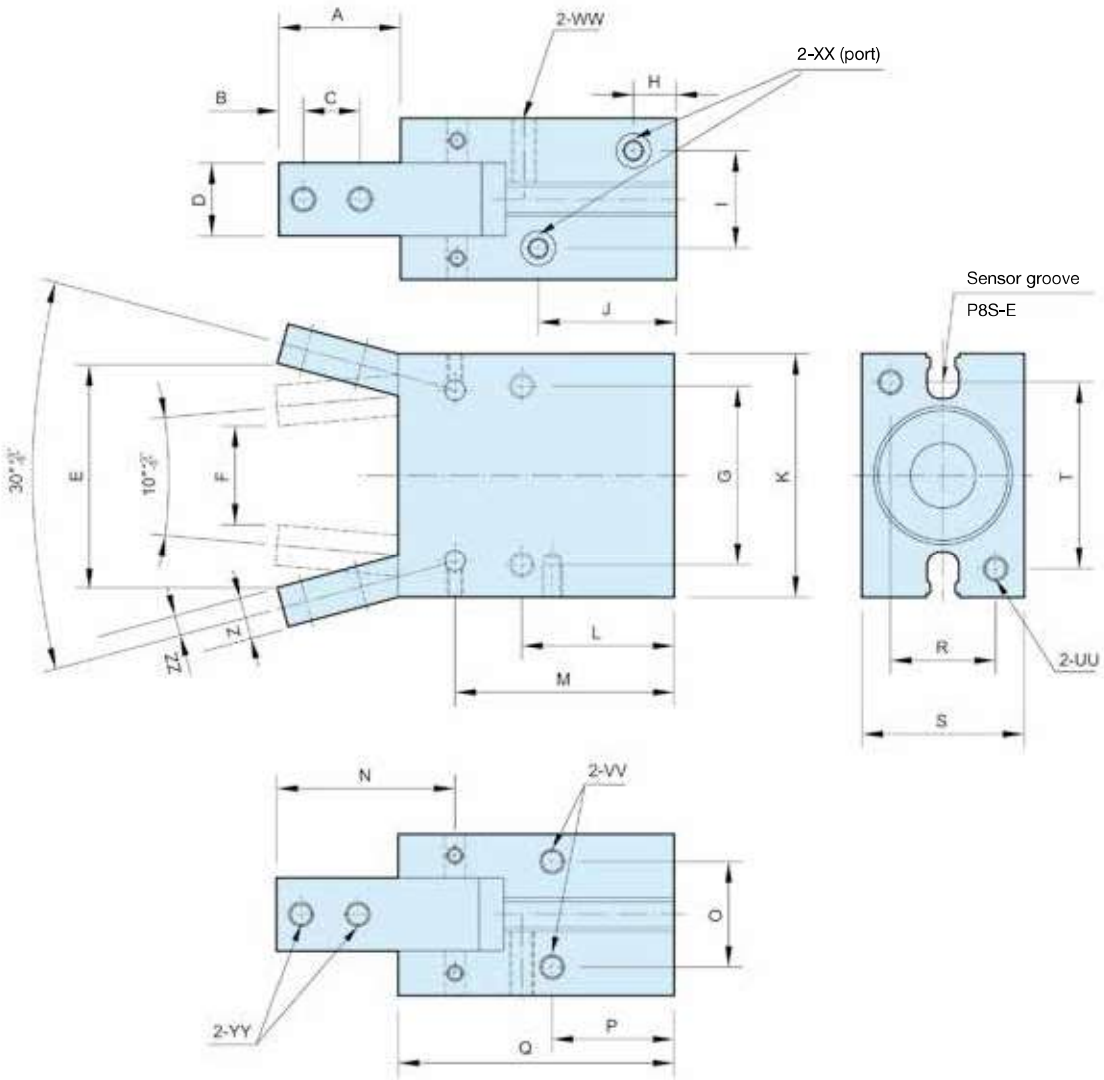

Bore mm	A	B	C	D 0/-0.03	E	F	G	H	I	J	K	L	M	N	O	P	Q	R	S	T
12	15,4	3	6	7	26,3	9	20	7,5	10,2	23,5	28	20	32,9	21,5	10,2	16	39	10	16	22
16	17,5	3	8	9	31,1	14	24	7,5	12	22	34	22,5	35	25	14	18	42,5	14	22	26
20	22	4	10	12	40,1	18	30	8	13	25	45	25	39,5	32,5	16	19	50	16	26	35
25	26	5	12	14	47,9	21	36	8,5	18	28	52	28,5	45,5	38,5	20	21,5	58	20	32	40
32	30	6	14	18	55,1	24	44	10,5	24	34	60	37,5	54	44	26	30	68	26	40	46

Bore mm	UU	VV	WW	XX	YY	Z	ZZ
12	M3 x 5 depth	M3 x 5 depth	M3 x 5 depth	M3 x 5 depth	M3	5	2,5
16	M4 x 7 depth	M4 x 7 depth	M4 x 7 depth	M5 x 5 depth	M3	6	3
20	M5 x 8 depth	M5 x 8 depth	M5 x 8 depth	M5 x 5 depth	M4	7	3,5
25	M6 x 10 depth	M6 x 10 depth	M6 x 10 depth	M5 x 5 depth	M5	9	4
32	M6 x 10 depth	M6 x 10 depth	M6 x 10 depth	M5 x 5 depth	M6	10	5

P5GB - Parallel double acting, square jaw carriers

Available with a comprehensive range of bore sizes Ø12 - 32 mm the P5GB double acting parallel gripper is an accurate workpiece holding device. The anodised aluminium body has flexible installation mountings on three sides and recessed sensor grooves.

- Bore sizes Ø12, 16, 20, 25 and 32mm
- Double acting
- Anodised corrosion protection
- Magnetic piston as standard
- Optional sensors

Technical Information

Acting type		Double acting				
Bore (mm)		12	16	20	25	32
Port size		M3 x 0.5		M5 x 0.8		
Medium		Air				
Operating pressure range		1.5 - 7 bar				
Temperature range		-5 to +60°C (no freezing)				
Max frequency		180 Cycles/min				
Lubrication	Cylinder	Not required				
Lever	Grease					
Max. arm length mm (L)		30	40	60	70	85
Theoretical holding force kgf-cm						
	Closed side	0.8	2.4	4.7	7.5	10
	Opened side	0.5	1.8	3.5	6.0	8.5
Lever open / closed stroke		6	8	12	14	16
Weight (g)		66	144	255	419	719

For more information see www.parker.com/euro_pneumatic

P5GB - Parallel Grippers

Bore mm	Order code
12	**P5GB-012MSG006B**
16	**P5GB-016MSG008B**
20	**P5GB-020MSG012B**
25	**P5GB-025MSG014B**
32	**P5GB-032MSG016B**

Length of gripping point

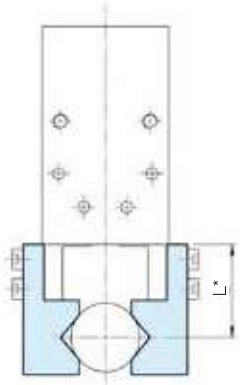

* L = gripping joint length 30mm, pressure 5kgf/cm²

Installation of sensor

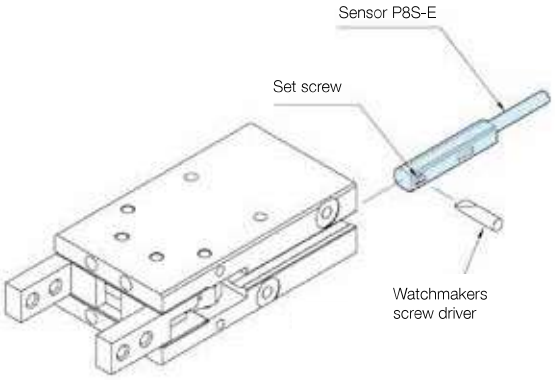

Sensors - Series P8S-E

Magnetic Sensor	M8 - Snap in	Flying lead
	0.165 m PUR cable with M8 connector	2 m PUR cable
PNP	**P8S-EPSUS**	**P8S-EPFXS**
NPN	**P8S-ENSUS**	**P8S-ENFXS**
Reed	**P8S-ERSUS**	**P8S-ERFXS**

Dimensions (mm)

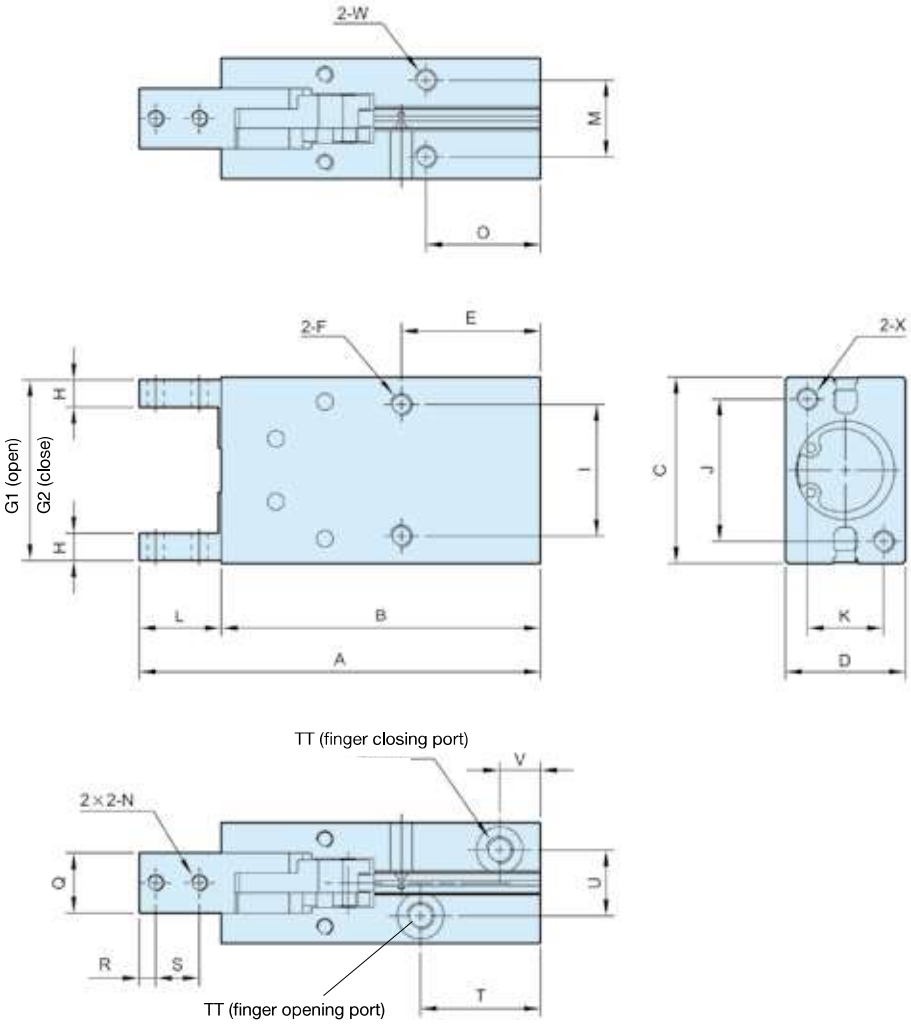

Bore mm	A	B	C	D	E	F	G1	G2	H	I	J	K	L	M	N	O	Q 0/-0.03	R
12	63,5	50,5	28	16	20	M3 x 0.5 x 5 depth	27	21	4	18	17	10	13	10	M3 x 0.5	16	7	3
16	73,5	58,5	34	22	25,5	M4 x 0.7 x 11 depth	33	25	5	24	26	14	15	14	M3 x 0.5	21	11	3
20	88,5	69,5	45	26	25	M5 x 0.8 x 8 depth	44	32	6	30	35	16	19	16	M4 x 0.7	19	12	4
25	102,5	78,5	52	32	28	M6 x 1.0 x 10 depth	51	37	8	36	40	20	24	20	M5 x 0.8	22	14	5
32	120,5	90,5	60	40	34	M6 x 1.0 x 10 depth	59	43	10	44	46	24	30	26	M6 x 1.0	26	20	7

Bore mm	S	T	TT	U	V	W	X
12	6	23	M5 x 0,8 x 5 depth	10,2	7,5	M3 x 0.5 x 5 depth	M3 x 0.5 x 5 depth
16	8	22	M5 x 0,8 x 5 depth	12	7,5	M4 x 0.7 x 7 depth	M4 x 0.7 x 7 depth
20	10	26	M5 x 0,8 x 5 depth	13	8	M5 x 0.8 x 8 depth	M5 x 0.8 x 8 depth
25	12	29	M5 x 0,8 x 5 depth	18	8,5	M6 x 1.0 x 10 depth	M6 x 1.0 x 10 depth
32	15	35	M5 x 0,8 x 5 depth	24	10,5	M6 x 1.0 x 10 depth	M6 x 1.0 x 10 depth

P5GD - Parallel precision guided double acting, square jaw carriers

The P5GD is a parallel double acting gripper with integral linear guides that provide rigidity and high precision for the stainless steel jaw carriers. The anodised aluminium body has mounting points on four sides and integral sensors grooves.

- Bore sizes Ø10, 16, 20 and 25mm
- Double acting
- Stainless steel jaw carriers
- Anodised corrosion protection
- Magnetic piston as standard
- Optional sensors

Technical Information

Acting type	Double acting			
Bore (mm)	10	16	20	25
Port size	M3 x 0.5	M5 x 0.8		
Medium	Air			
Operating pressure range	2 to 7 bar	1 to 7 bar		
Temperature range	-10 to +60°C (no freezing)			
Repeatability	± 0.01 mm			
Max operating frequency	180 Cycles/min			
Lubrication	Not required			
Weight (g)	55	125	250	460

Bore	Gripping force [1] Gripping force per finger effective value N (kgf) External	Internal	Opening closing stroke (both sides) (mm)
10	9.8 (1)	17 (1.7)	4
16	30 (3.1)	40 (4.1)	6
20	42 (4.3)	66 (6.7)	10
25	65 (6.6)	104 (10.6)	14

[1] Values based on pressure of 0.5 MPa (5.1 kgf/cm2)

For more information see www.parker.com/euro_pneumatic

P5GD - Parallel Grippers

Bore mm	Order code
10	**P5GD-010MSG004B**
16	**P5GD-016MSG006B**
20	**P5GD-020MSG010B**
25	**P5GD-025MSG014B**

Length of gripping point

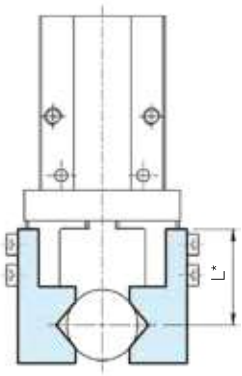

* L = Gripping point L = 20mm at center of stroke

Installation of sensor

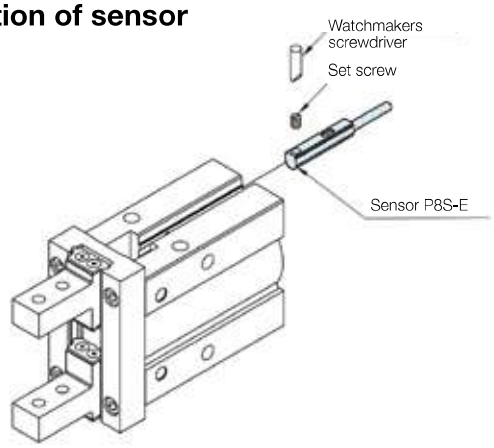

Sensors - Series P8S-E

Magnetic Sensor	M8 - Snap in	Flying lead
	0.165 m PUR cable with M8 connector	2 m PUR cable
PNP	**P8S-EPSUS**	**P8S-EPFXS**
NPN	**P8S-ENSUS**	**P8S-ENFXS**
Reed	**P8S-ERSUS**	**P8S-ERFXS**

Dimensions (mm)

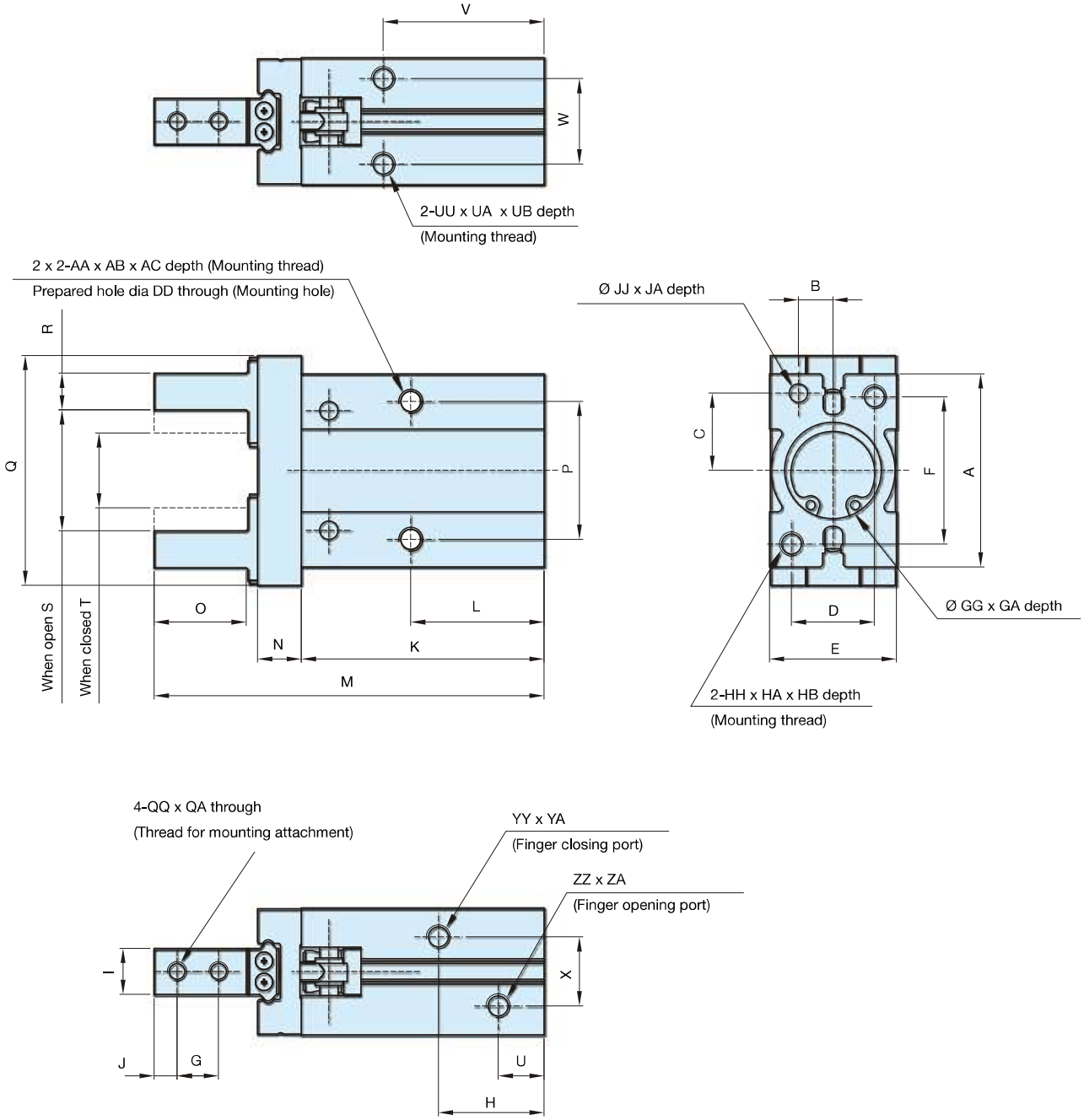

Bore mm	A	AA	AB	AC	B	C	D	DD	E	F	G	GG	GA	H	HH	HA	HB	I	J	JJ	JA	K	L	M
10	23	M3	0.5	5.5	$5.2^{+0.025}_{-0}$	$7.6^{+0.02}_{-0.02}$	12	2.6	$16.4^{+0.05}_{-0.05}$	18	5.7	$11H9^{+0.043}_{-0}$	2	19	M3	0.5	6	$5^{0}_{-0.05}$	3	$2H9^{+0.025}_{-0}$	3	37.8	23	57
16	30.6	M4	0.7	8	$6.5^{+0.25}_{-0}$	$11^{+0.02}_{-0.02}$	15	3.4	$23.6^{+0.05}_{-0.05}$	22	7	$17H9^{+0.043}_{-0}$	2	19	M4	0.7	8	$8^{0}_{-0.05}$	4	$3H9^{+0.025}_{-0}$	3	42.5	24.5	67.3
20	42	M5	0.8	10	$7.5^{+0.030}_{-0}$	$16.8^{+0.02}_{-0.02}$	18	3.4	$27.6^{+0.05}_{-0.05}$	32	9	$21H9^{+0.052}_{-0}$	3	23	M5	0.8	10	$10^{0}_{-0.05}$	5	$4H9^{+0.030}_{-0}$	4	52.8	29	84.8
25	52	M6	1	12	$10^{+0.02}_{-0.02}$	$21.8^{+0.02}_{-0.02}$	22	5.1	$33.6^{+0.05}_{-0.05}$	40	12	$21H9^{+0.052}_{-0}$	3.5	23.5	M6	1	12	$12^{0}_{-0.05}$	6	$4H9^{+0.02}_{-0.02}$	4	63.6	30	102.7

Bore mm	N	O	P	Q	QQ	QA	R	S	T	U	UU	UA	UB	V	W	X	YY	YA	ZZ	ZA
10	6	12	16	29	M2.5	0.45	$4^{0}_{-0.1}$	$15.2^{+2.2}_{0}$	$11.2^{0}_{-0.7}$	9	M3	0.5	6	27	11.4	10	M3	0.5	M3	0.5
16	7.5	15	24	38	M3	0.5	$5^{0}_{-0.1}$	$20.9^{+2.2}_{-0.2}$	$14.9^{0}_{-0.7}$	8.5	M4	0.7	4.5	30	16	13	M5	0.8	M5	0.8
20	9.5	20	30	50	M4	0.7	$8^{0}_{-0.1}$	$26.3^{+2.2}_{-0.2}$	$16.3^{0}_{-0.7}$	10	M5	0.8	8	35	18.6	15	M5	0.8	M5	0.8
25	11	25	36	63	M5	0.8	$10^{0}_{-0.1}$	$33.3^{+2.2}_{-0.2}$	$19.3^{0}_{-0.8}$	9.7	M6	1	10	36.5	22	20	M5	0.8	M5	0.8

P5GL - 180° Angular double acting, cam style, square jaw carriers

The P5GL is a 180° angular gripper of compact size and lightweight construction. With double acting movement high gripping forces are achieved via internal cams. The anodised body has mounting points on four sides and sensors can be fitted in any of the four integral grooves.

- Bore sizes Ø10, 16, 20 and 25mm
- Double acting
- Anodised corrosion protection
- Magnetic piston as standard
- Optional sensors

Technical Information

Acting type	Double acting			
Bore (mm)	10	16	20	25
Medium	Air			
Operating pressure range	1 to 6 bar			
Temperature range	-10 to +60°C (no freezing)			
Repeatability	± 0.2 mm			
Max operating frequency	60 Cycles/min			
Lubrication	Not required			
Effective force (Nm) at (5kgf/cm²)	0.16	0.54	1.10	2.28
Operating angle (both sides)				
Opened side	180° - 182°			
Closed side	-3°			
Weight (g)	80	150	320	600

For more information see www.parker.com/euro_pneumatic

P5GL - 180° Angular Grippers - Cam Style

Bore mm	Order code
10	**P5GL-010MSG180B**
16	**P5GL-016MSG180B**
20	**P5GL-020MSG180B**
25	**P5GL-025MSG180B**

Sensors - Series P8S-H

Magnetic Sensor	M8 - Snap in	Flying lead
	0.165 m PUR cable with M8 connector	1 m PUR cable
Reed NO	**P8S-HRSUS**	**P8S-HRFCS**

Dimensions (mm)

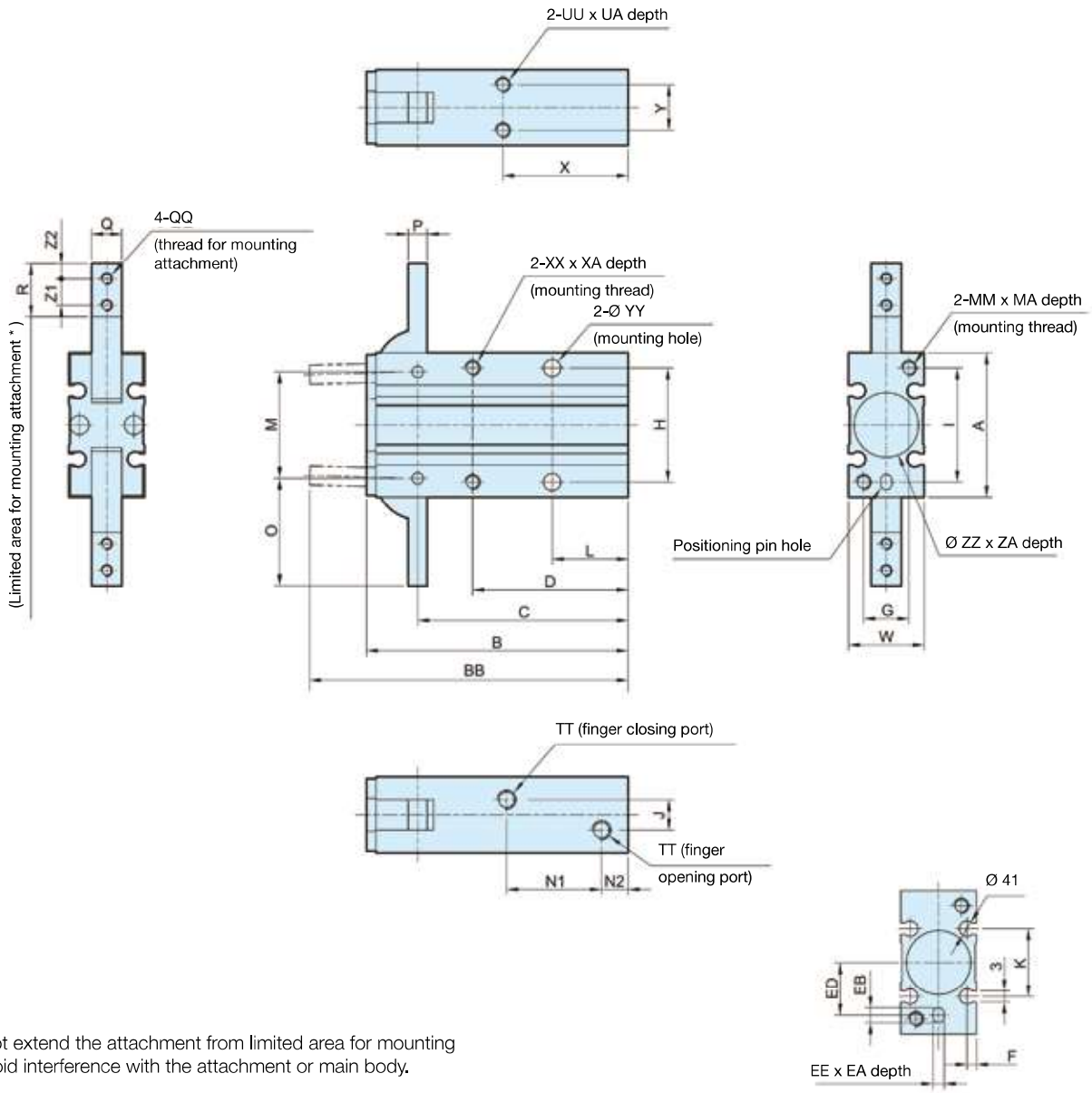

* Do not extend the attachment from limited area for mounting to avoid interference with the attachment or main body.

Bore mm	A	B	BB	C	D	EE	EA	EB	ED	F	G	H	I	J	K	L	M	MA	MM	N1	N2	O	P	Q
12	30	58	71	47,5	35	3H9 $^{+0.025}_{-0}$	3	4	9	2	9	24	24	3	13	18	22	6	M3 x 0.5	23	7	23,5	4	6 $^{+0.005}_{-0.025}$
16	38	69	84	55,5	41	3H9 $^{+0.025}_{-0}$	3	4	15	2,5	12	30	30	8	18	20	28	8	M4 x 0.7	25	7	28,5	5	8 $^{+0.005}_{-0.025}$
20	48	86	106	69	50	4H9 $^{+0.030}_{-0}$	4	5	19	3	16	36	38	12	20	25	36	10	M5 x 0.8	32	8	37	8	10 $^{+0.005}_{-0.025}$
25	58	107	131	86	60	4H9 $^{+0.030}_{-0}$	4	5	23	3	18	42	46	14	24	30	45	12	M6 x 1	42	8	45	10	12 $^{+0.005}_{-0.025}$

Bore mm	QH	QQ	R	TT	UA	UU	W	X	XA	XX	Y	YY	ZA	ZZ	Z1	Z2
12	3,4	M3 x 0.5	12	M5 x 0.8 x 5 depth	4	M3 x 0.5	15	30	6	M3 x 0.5	9	3,4	1,5	11H9 $^{+0.043}_{-0}$	6	3
16	3,4	M3 x 0.5	14	M5 x 0.8 x 5 depth	5	M4 x 0.7	20	33	8	M4 x 0.7	12	4,5	1,5	17H9 $^{+0.043}_{-0}$	7	4
20	4,5	M4 x 0.7	18	M5 x 0.8 x 5 depth	8	M5 x 0.8	26	42	10	M5 x 0.8	14	5,5	1,5	21H9 $^{+0.052}_{-0}$	9	5
25	5,5	M5 x 0.8	22,5	M5 x 0.8 x 5 depth	10	M6 x 1	30	50	12	M6 x 1	16	6,6	1,5	26H9 $^{+0.052}_{-0}$	12	6

P5RS - Rotary Actuators

The P5RS rotary table units provide precise control even under heavy loads, with specially designed load fixing and centring capabilities. End stroke cushioning using supplied adjusting bolts or optional shock absorbers offers dependable linear cushioning enabling objects to be carried and positioned safely and securely.

- Bores Ø16, 20, 25 and 32mm
- Twin rack and pinion
- Adjustable between 0° and 190°
- Magnetic piston standard
- Stroke adjusters standard
- Optional shock absorbers bore Ø20 and 25mm
- Easy mounting of work piece

Operating Information

Pressure range:	1 to 9 bar
Temperature range:	-5° to 60° C
Filtration requirements:	
Air fltration	40 micron or better
Air lubrication	Not necessary*
Air humidity	Low moisture content (dry)

* Addition of lubrication will greatly increase service life

For more information see www.parker.com/euro_pneumatic

Ordering Information: P5RS

Bore mm	Description	Ports (BSPP)	Rotation	Torque (N-m at 5 bar)	Weight (kg)	**Order code**
16	Rotary table, stroke adjusters	1/8	190 degrees	1.21	0.7	**P5RS-016DSG190B**
20	Rotary table, stroke adjusters	1/8	190 degrees	2.51	1.16	**P5RS-020DSG190B**
25	Rotary table, stroke adjusters	1/8	190 degrees	4.91	1.57	**P5RS-025DSG190B**
32	Rotary table, stroke adjusters	1/8	190 degrees	9.86	3.07	**P5RS-032DSG190B**

Note: Above units are supplied with rubber buffer stroke adjusters.

Optional Shock Absorbers

Bore mm	Rotary Actuator	**Order code**
16	P5RS-016DSG190B	**N/A**
20	P5RS-020DSG190B	**N/A**
25	P5RS-025DSG190B	**MC150M**
32	P5RS-032DSG190B	**MC225M**

Sensors - Series P8S-F

Magnetic Sensor	**M8 - Snap in**	**Flying lead**
	0.15 m PUR cable with M8 connector	2 m PUR cable
Reed, NO	**P8S-FRSUS**	**P8S-FRFXS**

Load capacity P5RS Rotary Table

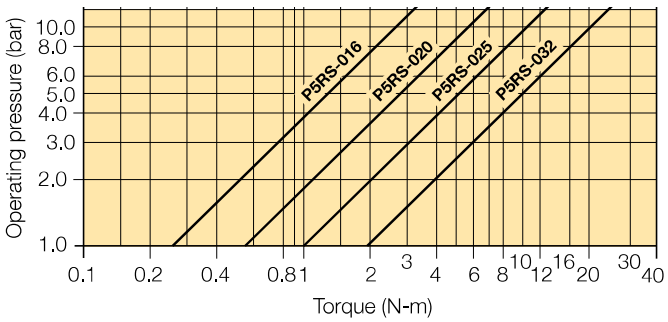

Allowable load

Set the load and moment to be applied to the table within the allowable values shown in the table below.(Values outside of limitations will cause excessive play, deteriorate accuracy, and shorten service life).

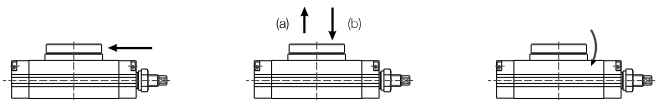

Bore	Allowable radial load (N)	Allowable thrust load (N) (a)	Allowable thrust load (N) (b)	Allowable moment (Nm)
16	78	74	78	2.4
20	147	137	137	4.0
25	196	197	363	5.3
32	314	296	451	9.7

Dimensions P5RS Rotary Table

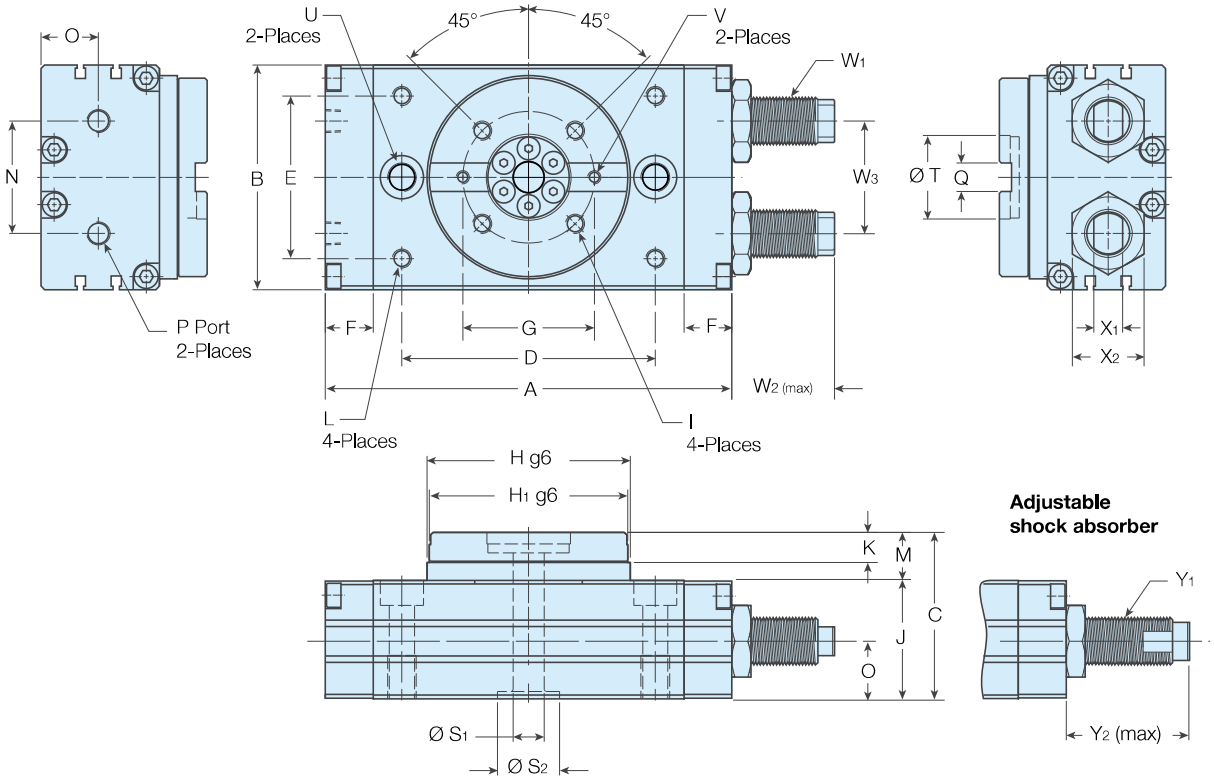

Bore mm	A	B	C	D	E	F	G	H	H1	I	J	K	L	M	N	O	P BSPP	Q
16	108	58	47	62	38	15	38	50	48	M5 x 7 Dp, P.C.D38	33	8	M5 x 8 Dp	14	26	15.5	PT 1/8	8 $^{+0.03}_{-0}$ x 3.3 Dp
20	128	68	55	78	47	15	46	62.5	60	M6 x 7 Dp, P.C.D46	38	10	M6 x 8 Dp	17	27	18.5	PT 1/8	10 $^{+0.03}_{-0}$ x 3.5 Dp
25	135.5	77	58.5	84	55	15.5	48	67	65	M6 x 9 Dp, P.C.D48	41.5	10	M6 x 8 Dp	17	37	20	PT 1/8	12 $^{+0.03}_{-0}$ x 4 Dp
32	170	94	69.5	106	68	20	55	85	83	M8 x 10 Dp, P.C.D55	49.5	12.5	M8 x 8.5 Dp	20	47	24	PT 1/8	12 $^{+0.03}_{-0}$ x 5 Dp

Bore mm	S1	S2	T	U	V	W1	W2	W3	X1	X2	Y1	Y2
16	6	17 (H7) x 2.5 Dp	24 (H7) x 3 Dp	2-Ø 6.8 thru, Ø11 x 6.5 Dp, M8 x 12 Dp (Sink)	M3 x 4 Dp	M10 x 1,0	27	26	7	17	N/A	N/A
20	10	22 (H7) x 2.5 Dp	32 (H7) x 3 Dp	2-Ø 8.6 thru, Ø14 x 8.5 Dp, M10 x 15 Dp (Sink)	M4 x 6 Dp	M12 x 1,0	23	32	8	19	N/A	N/A
25	13	22 (H7) x 3 Dp	32 (H7) x 3.7 Dp	2-Ø 8.6 thru, Ø14 x 8.5 Dp, M10 x 15 Dp (Sink)	M4 x 5 Dp	M14 x 1,5	36	37	8	22	MC150M	52
32	13	26 (H7) x 3 Dp	35 (H7) x 4.7 Dp	2-Ø 10.5 thru, Ø18 x 10.5 Dp, M12 x 18 Dp (Sink)	M5 x 5 Dp	M20 x 1.5	43	47	12	30	MC225M	62

Dimensions in (mm)

P5SS - Precision Slide Tables

The Precision Slide Table P5SS is a pneumatic actuator, operated by two cylinders mounted in parallel for moving loads fitted on its mobile carriage or on its front plate quickly and accurately. Optional end of stroke adjusters offer precise adjustment even when the slide table is pressurised.

- High precision
- Bores Ø6, 8, 12,16, 20 and 25mm
- Combination of dual bore cylinder and linear rail
- Magnetic piston standard
- Rubber bumper standard
- Optional stroke adjusters
- Optional shock absorbers bores Ø8 - 25mm

Operating Information

Pressure range:	1.5 to 7 bar
Temperature range:	-5° to 60° C
Filtration requirements:	
Air fltration	40 micron or better
Air lubrication	Not necessary*
Air humidity	Low moisture content (dry)

* Addition of lubrication will greatly increase service life

For more information see www.parker.com/euro_pneumatic

Ordering Information: P5SS

Ø6mm bore

Stroke (mm)	Order code
10	**P5SS-006DSG010B**
20	**P5SS-006DSG020B**
30	**P5SS-006DSG030B**
40	**P5SS-006DSG040B**
50	**P5SS-006DSG050B**

Ø12mm bore

Stroke (mm)	Order code
10	**P5SS-012DSG010B**
20	**P5SS-012DSG020B**
30	**P5SS-012DSG030B**
40	**P5SS-012DSG040B**
50	**P5SS-012DSG050B**
75	**P5SS-012DSG075B**
100	**P5SS-012DSG100B**

Ø20mm bore

Stroke (mm)	Order code
10	**P5SS-020DSG010B**
20	**P5SS-020DSG020B**
30	**P5SS-020DSG030B**
40	**P5SS-020DSG040B**
50	**P5SS-020DSG050B**
75	**P5SS-020DSG075B**
100	**P5SS-020DSG100B**
125	**P5SS-020DSG125B**

Ø8mm bore

Stroke (mm)	Order code
10	**P5SS-008DSG010B**
20	**P5SS-008DSG020B**
30	**P5SS-008DSG030B**
40	**P5SS-008DSG040B**
50	**P5SS-008DSG050B**
75	**P5SS-008DSG075B**

Ø16mm bore

Stroke (mm)	Order code
10	**P5SS-016DSG010B**
20	**P5SS-016DSG020B**
30	**P5SS-016DSG030B**
40	**P5SS-016DSG040B**
50	**P5SS-016DSG050B**
75	**P5SS-016DSG075B**
100	**P5SS-016DSG100B**
125	**P5SS-016DSG125B**

Ø25mm bore

Stroke (mm)	Order code
10	**P5SS-025DSG010B**
20	**P5SS-025DSG020B**
30	**P5SS-025DSG030B**
40	**P5SS-025DSG040B**
50	**P5SS-025DSG050B**
75	**P5SS-025DSG075B**
100	**P5SS-025DSG100B**
125	**P5SS-025DSG125B**
150	**P5SS-025DSG150B**

Sensors - Series P8S-E

Magnetic Sensor	**M8 - Snap in**	**Flying lead**
	0.165 m PUR cable with M8 connector	2 m PUR cable
PNP	**P8S-EPSUS**	**P8S-EPFXS**
NPN	**P8S-ENSUS**	**P8S-ENFXS**
Reed	**P8S-ERSUS**	**P8S-ERFXS**

Precision Slide Table Ø6 - Dimensions (mm)

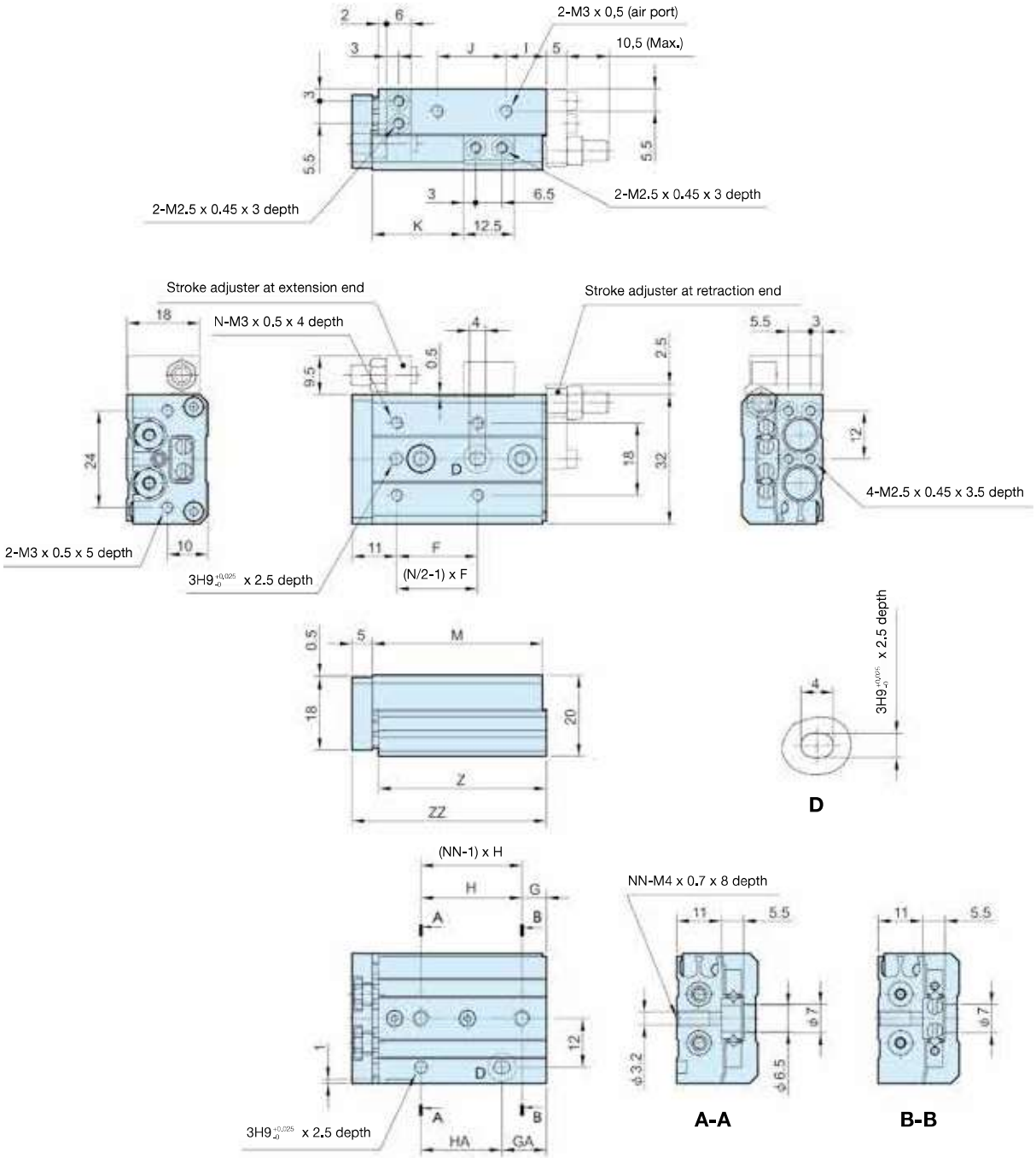

Stroke	F	G	GA	H	HA	I	J	K	M	N	NN	Z	ZZ
10	20	6	11	25	20	10	17	22,5	42	4	2	41,5	48
20	30	6	21	35	20	10	27	32,5	52	4	2	51,5	58
30	20	11	31	20	20	7	40	42,5	62	6	3	61,5	68
40	28	13	43	30	30	19	50	52,5	84	6	3	83,5	90
50	38	17	41	24	48	25	60	62,5	100	6	4	99,5	106

Precision Slide Table Ø8 - Dimensions (mm)

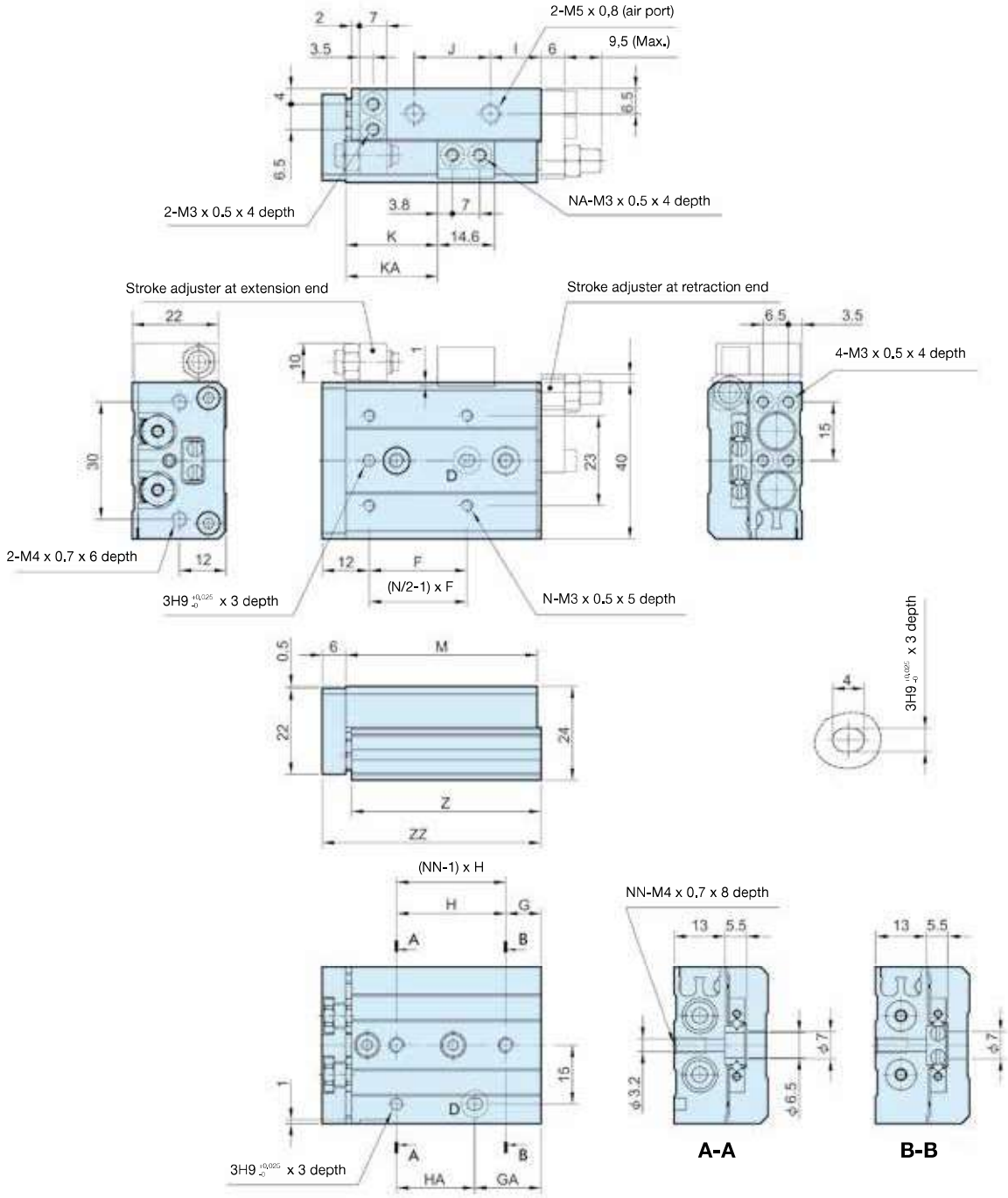

Stroke	F	G	GA	H	HA	I	J	K	KA	M	N	NA	NN	Z	ZZ
10	25	9	17	28	20	13	19,5	23,5	-	49	4	2	2	48,5	56
20	25	12	12	30	30	8,5	29	33,5	-	54	4	2	2	53,5	61
30	40	13	33	20	20	9,5	39	43,5	-	65	4	2	3	64,5	72
40	50	15	43	28	28	10,5	56	53,5	-	83	4	2	3	82,5	90
50	38	20	43	23	46	24,5	60	63,5	82,5	101	6	4	4	100,5	108
75	50	27	83	28	56	38,5	96	88,5	132,5	151	6	4	5	105,5	158

Precision Slide Table Ø12 - Dimensions (mm)

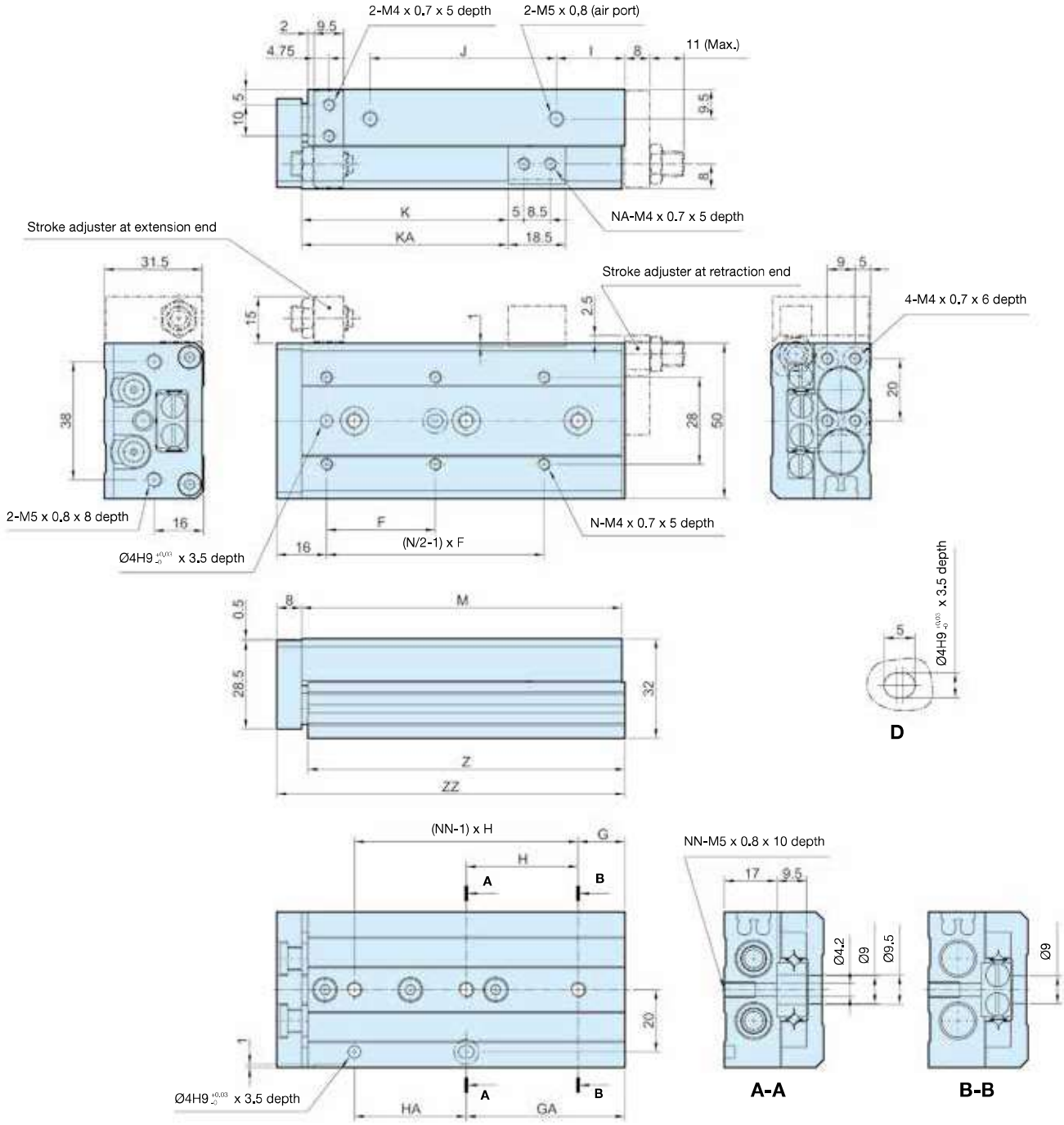

Stroke	F	G	GA	H	HA	I	J	K	KA	M	N	NA	NN	Z	ZZ
10	35	15	15	40	40	10	40	26,5	-	71	4	2	2	70	80
20	35	15	15	40	40	10	40	36,5	-	71	4	2	2	70	80
30	35	15	15	40	40	10	40	46,5	-	71	4	2	2	70	80
40	50	17	42	25	25	10	52	56,5	-	83	4	2	3	82	92
50	35	15	51	36	36	22	60	66,5	-	103	6	2	3	102	112
75	55	25	61	36	72	43	85	91,5	125,5	149	6	4	4	148	158
100	65	35	111	38	76	52	130	116,5	179,5	203	6	4	5	202	212

Precision Slide Table Ø16 - Dimensions (mm)

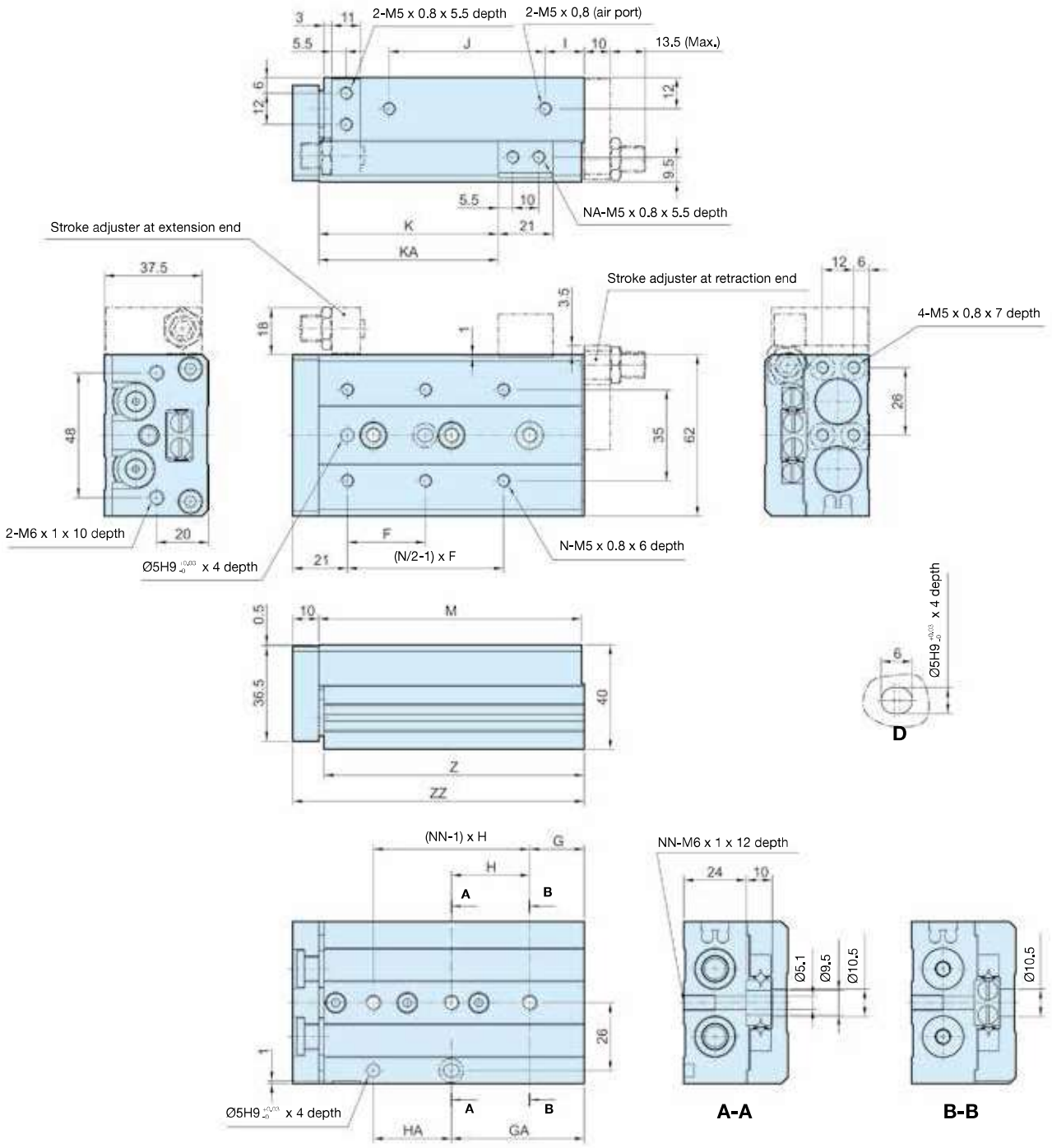

Stroke	F	G	GA	H	HA	I	J	K	KA	M	N	NA	NN	Z	ZZ
10	35	16	16	40	40	10	40	29	-	76	4	2	2	75	87
20	35	16	16	40	40	10	40	39	-	76	4	2	2	75	87
30	35	16	16	40	40	10	40	49	-	76	4	2	2	75	87
40	40	16	16	50	50	10	50	59	-	86	4	2	2	85	97
50	30	21	51	30	30	15	60	69	-	101	6	2	3	100	112
75	55	26	61	35	70	40	85	94	125	151	6	4	4	150	162
100	65	39	109	35	70	55	118	119	173	199	6	4	5	198	210
125	70	19	159	35	70	68	155	144	223	249	8	4	7	248	260

Precision Slide Table Ø20 - Dimensions (mm)

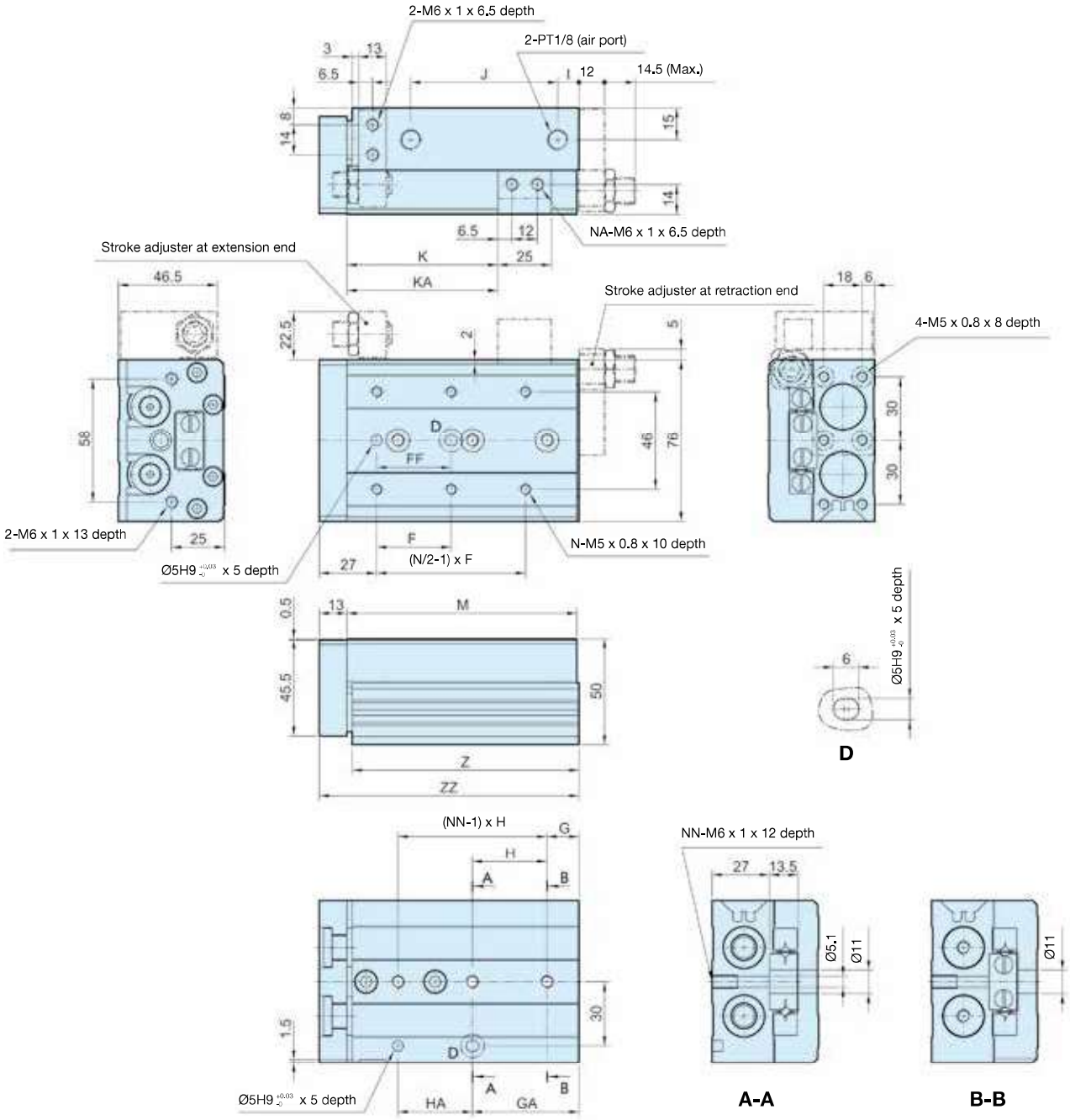

Stroke	F	FF	G	GA	H	HA	I	J	K	KA	M	N	NA	NN	Z	ZZ
10	50	40	15	25	45	35	10	44	31	-	83	4	2	2	81,5	97
20	50	40	15	25	45	35	10	44	41	-	83	4	2	2	81,5	97
30	50	40	15	25	45	35	10	44	51	-	83	4	2	2	81,5	97
40	60	50	15	35	55	35	10	54	61	-	93	4	2	2	91,5	107
50	35	35	15	50	35	35	10	69	71	-	108	6	2	3	106,5	122
75	60	60	19	54	35	70	10	108	96	-	147	6	2	4	145,5	161
100	70	70	37	107	35	70	58	113	121	169	200	6	4	5	198,5	214
125	70	70	41	155	38	76	70	155	146	223	254	8	4	6	252,5	268
150	80	80	19	195	44	88	87	190	171	275	306	8	4	7	304,5	320

Precision Slide Table Ø25 - Dimensions (mm)

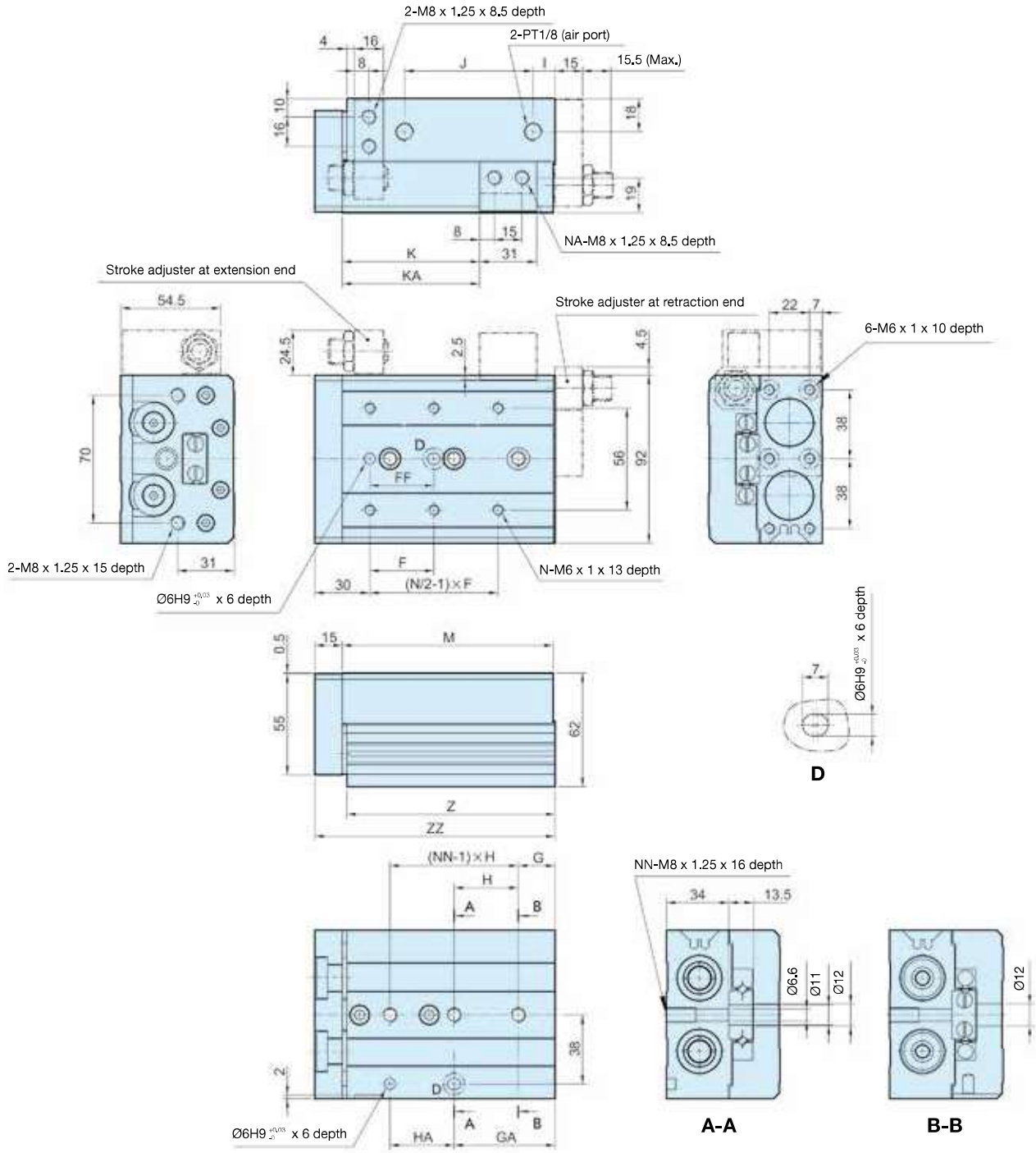

Stroke	F	FF	G	GA	H	HA	I	J	K	KA	M	N	NA	NN	Z	ZZ
10	50	40	22	22	45	45	12	47	35	-	92	4	2	2	90,5	108
20	50	40	22	22	45	45	12	47	45	-	92	4	2	2	90,5	108
30	50	40	22	22	45	45	12	47	55	-	92	4	2	2	90,5	108
40	60	50	22	22	55	55	12	57	65	-	102	4	2	2	100,5	118
50	35	35	20	55	35	35	12	70	75	-	115	6	2	3	113,5	131
75	60	60	26	61	35	70	33	90	100	-	156	6	2	4	154,5	172
100	70	70	32	102	35	70	50	114	125	162	197	6	4	5	195,5	213
125	75	75	40	154	38	76	67	155	150	218	255	8	4	6	253,5	271
150	80	80	30	190	40	80	82	180	175	258	295	8	4	7	293,5	311

Accessories Ø6 - Ø25

Stroke adjuster at extension end:

Mounted to body

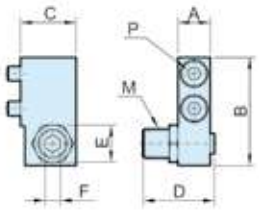

Mounted to table

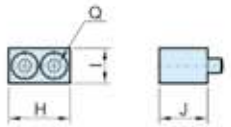

Bore mm	Order code	Adjustable stroke range (mm)	Mounted to body								Mounted to table			
			A	B	C	D	E	F	M	P*	H	I	J	Q*
6	P5SS-006-EA-05	5	6	17,8	10,5	16,5	7	2,5	M5 x 0.8	M2.5x10	12,5	6	8,5	M2.5 x 8
	P5SS-006-EA-15	15				26,5								
8	P5SS-008-EA-05	5	7	21,5	11	16,5	8	3	M6 x 1	M3 x 10	14,6	7	10	M3 x 10
	P5SS-008-EA-15	15				26,5								
	P5SS-008-EA-25	25				36,5								
12	P5SS-012-EA-05	5	9,5	31	16	20	11	4	M8 x 1	M4 x 16	18,5	10	13	M4 x 12
	P5SS-012-EA-15	15				30								
	P5SS-012-EA-25	25				40								
16	P5SS-016-EA-05	5	11	37	19	24,5	14	5	M10 x 1	M5 x 16	21	12	16,5	M5 x 16
	P5SS-016-EA-15	15				34,5								
	P5SS-016-EA-25	25				44,5								
20	P5SS-020-EA-05	5	13	45,5	24	27,5	17	6	M12 x 1.25	M6 x 20	25	13	21	M6 x 20
	P5SS-020-EA-15	15				37,5								
	P5SS-020-EA-25	25				47,5								
25	P5SS-025-EA-05	5	16	53,5	26,5	32,5	19	6	M14 x 1.5	M8 x 25	31	17	25,5	M8 x 25
	P5SS-025-EA-15	15				42,5								
	P5SS-025-EA-25	25				52,5								

* Size of hexagon socket head cap screws

Stroke adjuster at retraction end:

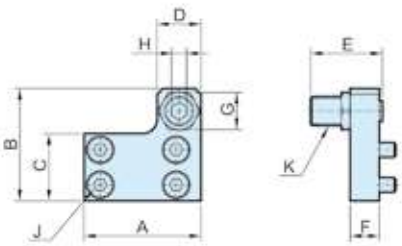

P5SS-006
P5SS-008

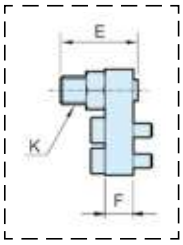

Bore mm	Order code	Adjustable stroke range (mm)	A	B	C	D	E	F	G	H	J*	K
6	P5SS-006-RA-05	5	21	19	10,5	8	16,5	5	7	2,5	M2.5 x 8	M5 x 0.8
	P5SS-006-RA-15	15					26,5					
8	P5SS-008-RA-05	5	25	22,5	12,5	9	16,5	6	8	3	M3 x 10	M6 x 1
	P5SS-008-RA-15	15					26,5					
	P5SS-008-RA-25	25					36,5					
12	P5SS-012-RA-05	5	32	31	18,5	13	20	8	12	4	M4 x 8	M8 x 1
	P5SS-012-RA-15	15					30					
	P5SS-012-RA-25	25					40					
16	P5SS-016-RA-05	5	40	38,5	23	15	24,5	10	14	5	M5 x 10	M10 x 1
	P5SS-016-RA-15	15					34,5					
	P5SS-016-RA-25	25					44,5					
20	P5SS-020-RA-05	5	50	48	29	21	27,5	12	17	6	M5 x 12	M12 x 1.25
	P5SS-020-RA-15	15					37,5					
	P5SS-020-RA-25	25					47,5					
25	P5SS-025-RA-05	5	60	58	35	23	32,5	15	19	6	M6 x 16	M14 x 1.5
	P5SS-025-RA-15	15					42,5					
	P5SS-025-RA-25	25					52,5					

* Size of hexagon socket head cap screws

Accessories Ø8 - Ø25

Shock absorber at extension end:

Mounted to body

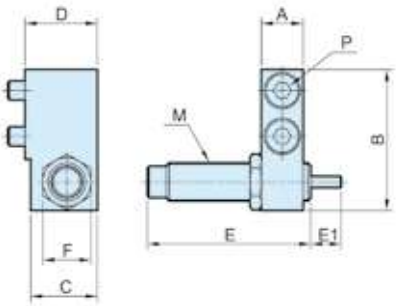

Mounted to table

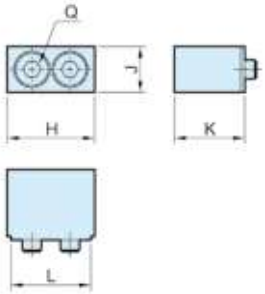

Bore mm	Order code	Mounted to body									Mounted to table				
		A	B	C	D	E	E1	F	M	P*	H	J	K	L	Q*
8	**P5SS-008-ESK**	7	23	14	15,5	40,6	6	11	M8 x 1	M3 x 16	16,6	7	15,5	14,6	M3 x 16
12	**P5SS-012-ESK**	9,5	31	14,5	16	40,6	6	11	M8 x 1	M4 x 16	20,5	10	15	18,5	M4 x 12
16	**P5SS-016-ESK**	11	37	17,5	19	47	7	12,7	M10 x 1	M5 x 16	23	12	18,5	21	M5 x 16
20	**P5SS-020-ESK**	13	45,5	23,5	26	67	12	19	M14 x 1.5	M6 x 25	27	13	25,5	25	M6 x 25
25	**P5SS-025-ESK**	16	53,5	23,5	26,5	67	12	19	M14 x 1.5	M8 x 25	33	17	25,5	31	M8 x 25

* Size of hexagon socket head cap screws

Shock absorber at retraction end:

Mounted to body

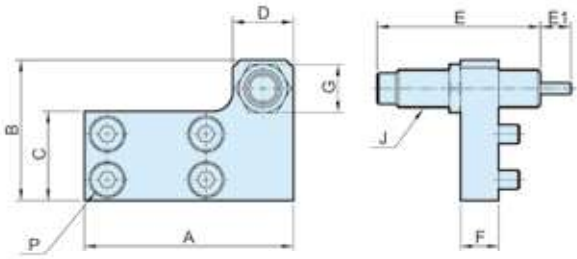

Mounted to table

P5SS-008

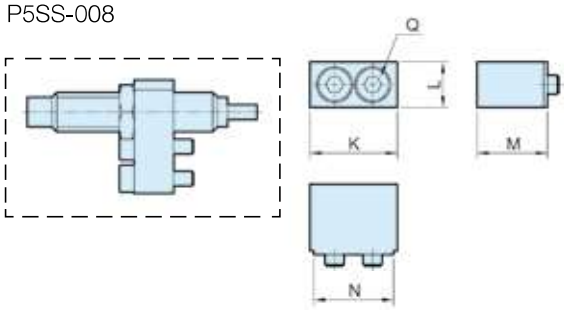

Bore mm	Order code	Mounted to body										Mounted to table				
		A	B	C	D	E	E1	F	G	J	P*	K	L	M	N	Q*
8	**P5SS-008-RSK**	38	23	12,5	14	40,6	6	8	12	M8 x 1	M3 x 12	16,6	7	15,5	14,6	M3 x 16
12	**P5SS-012-RSK**	45	31	18	14	40,6	6	8	11	M8 x 1	M4 x 8	20,5	10	15	18,5	M4 x 12
16	**P5SS-016-RSK**	55	37	23,5	16	47	7	10	12,7	M10 x 1	M5 x 10	23	12	18,5	21	M5 x 16
20	**P5SS-020-RSK**	70	47	29	23	67	12	12	19	M14 x 1.5	M5 x 12	27	13	25,5	25	M6 x 25
25	**P5SS-025-RSK**	80	54	35	23	67	12	12	19	M14 x 1.5	M6 x 16	33	17	25,5	31	M8 x 25

* Size of hexagon socket head cap screws

Pneumatic Stop Cylinders

Pneumatic stop cylinders with hydraulic industrial shock absorbers for soft, rebound-free stopping of a conveyed load.

Pneumatic Stop Cylinders

- Soft, rebound-free stopping of a conveyed load.
- Flexible: for vertical or horizontal installation
- Types with shock absorber/roller lever combination, lone roller or roller with a piston rod that ensures direct stoppage
- Shock absorbers are easy to replace, even when fitted
- Rotating stop head for adjustment in line with the direction of travel of the conveyed load
- Rocker can be deactivated for alternate travel function
- Single and double acting cylinder variants
- Operating pressure up to 10 bar
- Different shock absorbers for conveyed load weights of up to 1700 kg and speeds of up to 45 m/min
- Optional: position switch for piston rod and proximity switch for rocker

Rocker locking
After the conveyed load is stopped, the rocker is lowered and unlocked by applying compressed air. After the conveyed load has been moved, the return spring brings the rocker into its upper end position so that it is back in its start position for the next stopping procedure.

Integrated shock absorbers
The shock absorbers, aligned to the weight and speed of the load, ensure gentle and precise stopping of the conveyed load

Guide rod
Thanks to the easy-to-replace guide rod, the rocker can be quickly rotated so that the conveyor can move in a different direction.

Diecast Aluminum
The design of the robust, lightweight diecast aluminum and its compact size enables it to be installed in many different conveyor systems.

Unrestricted conveyor movement
The rocker is held in the OFF position (deactivated) by simply clipping a spring steel sheet onto it. The conveyed load can pass through the stop cylinder unobstructed while the rocker is in this position.

Stop Cylinder — Vertical Version

STVSR series

Integrated shock absorber for heavy conveyed loads

The built-in shock absorber stops the conveyed load in a gentle and precise manner without disturbing the load. Various shock absorbers are available depending on the weight of the conveyed load and the desired transport speed.

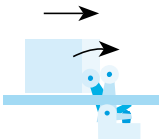

STVDR series

Roller for lower conveyed load weights

The piston rod with upward facing roller is lowered by applying compressed air once the conveyed load is on the ground. Afterwards, it is brought back into the upper end position by a return spring.

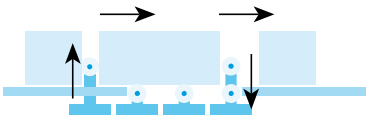

STVD series

Direct stopping piston rod for heavy conveyed loads

Reliably stops heavy conveyed loads at low transport speeds. Can also be used as a locking cylinder due to its solid piston rod.

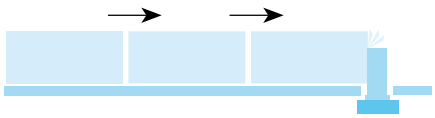

Stop Cylinder — Horizontal Version

STHSR series

Horizontal stop cylinder with shock absorber

Reliably stops heavy conveyed loads at high transport speeds. Well-suited for buffer areas.

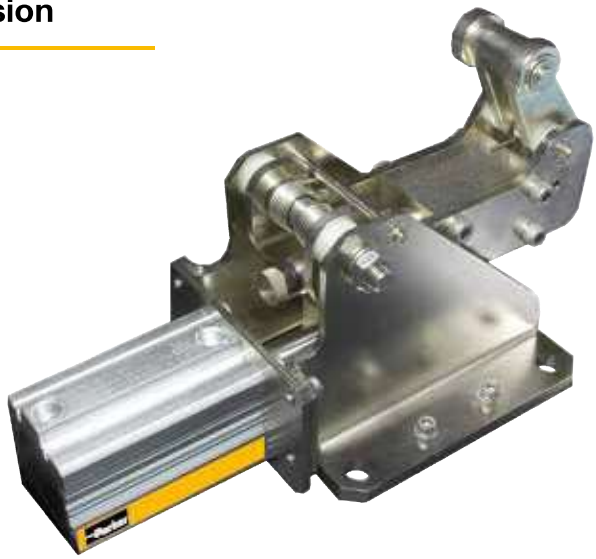

Pneumatic Stop Cylinders
Ø 50-80 mm
Available with hydraulic Industrial shock absorbers

Vertical Version:
- STVSR series
- STVDR series
- STVD series

Horizontal Version:
- STHSR series

Vertical versions

Vertical stop cylinder with shock absorber and roller lever

Cylinder Ø mm	Stroke (mm)	**Order code**
50	30	**STVSR-50-30-.-...**
80	40	**STVSR-80-40-.-...**

Vertical stop cylinder with roller

Cylinder Ø mm	Stroke (mm)	**Order code**
50	30	**STVDR-50-30-.-...**

Vertical stop cylinder with direct stopping piston rod

Cylinder Ø mm	Stroke (mm)	**Order code**
50	30	**STVD-50-30-.-...**

Horizontal versions

Horizontal stop cylinder with shock absorber and roller lever

Cylinder Ø mm	Stroke (mm)	**Order code**
50	50	**STHSR-50-50-.-...**

Pneumatic Circuit Diagrams

Single acting

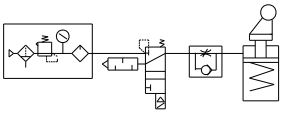

Double acting

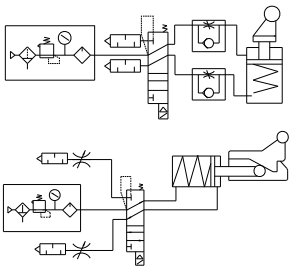

Specifications	**Description**
Medium	Filtered, unlubricated compressed air (if oil is used then it must be continued)
Operating pressure range	2 to 10 bar
Test pressure	15 bar
Ambient temperature range	0 °C to +65 °C (If intended for use below 0 °C consult Technical Sales)
Lubrication	Unlubricated
Cushioning	Cushioning mat made from oil-resistant rubber

Weight	
Type STVSR-50-30	1.800 kg
Type STVSR-80-40	6.820 kg
Type STVDR-50-30	1.800 kg
Type STVD-50-30	1.800 kg
Type STHSR-50-50	8.750 kg

STVSR Series - Stop cylinder Ø 50mm - Vertical version

Order Key

STVSR - 50 - 30 - L - STD

	Shock absorber strength
L	Light 50 - 150 kg
H	High 150 - 300 kg

	Connecting thread
STD	Standard G1/8
NPT	National Pipe Thread 1/8"

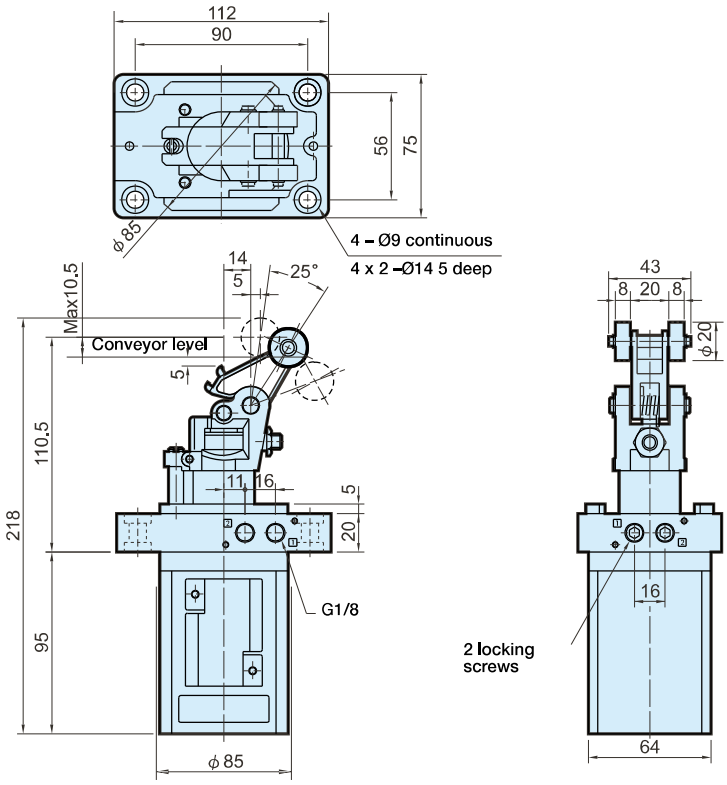

Option
- Rocker locking

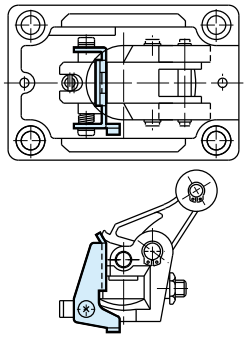

- Free travel of conveyed load

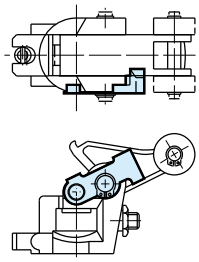

Loads - Moving mass subject to speed — Type STVSR-50-30

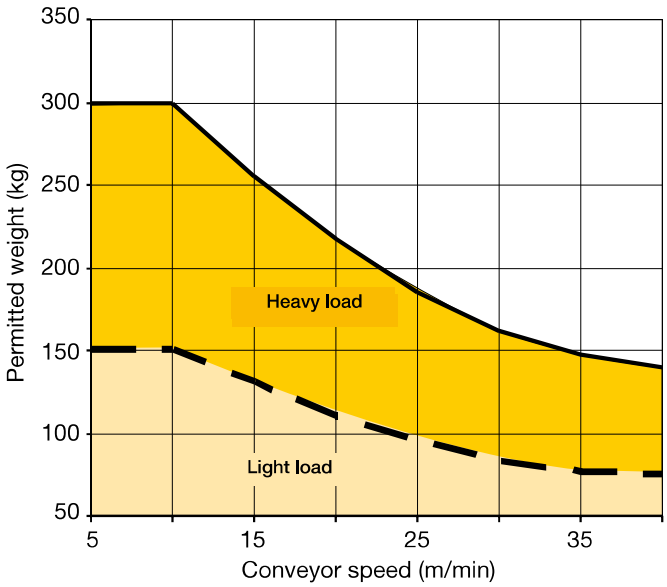

Axial load subject to operating pressure — Type STVSR-50-30

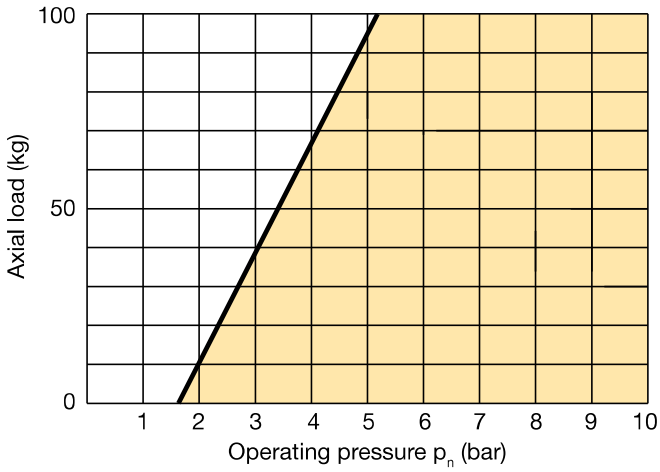

STVSR Series - Stop cylinder Ø 80mm - Vertical version

Order Key

STVSR - 80 - 40 - STD

	Connecting thread
STD	Standard G1/4
NPT	National Pipe Thread 1/4"

Note: Shock absorbers can set at 50 - 800kg

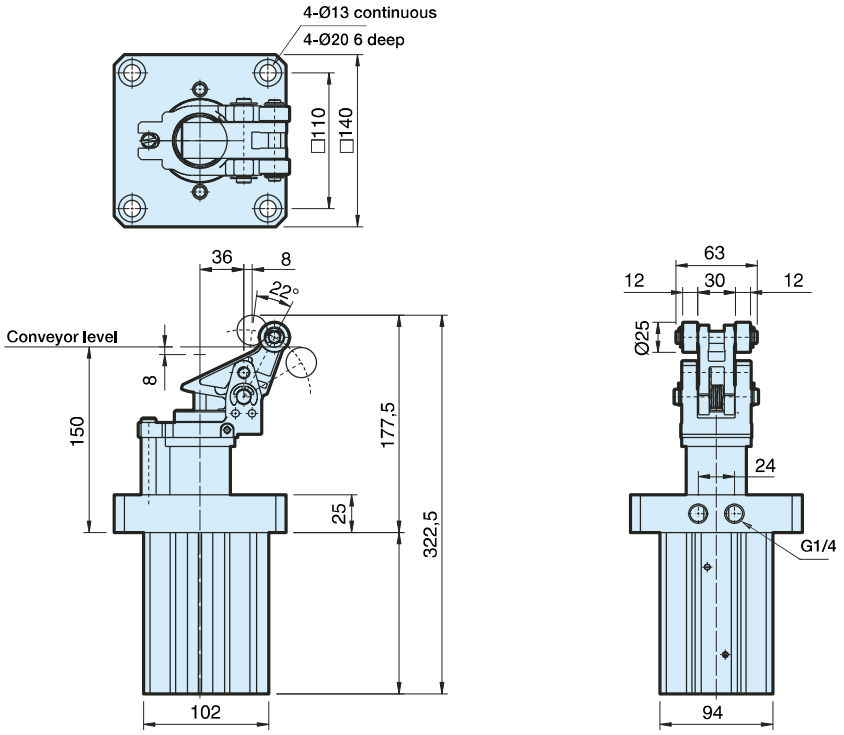

Loads - Moving mass subject to speed — Type STVSR-80-40

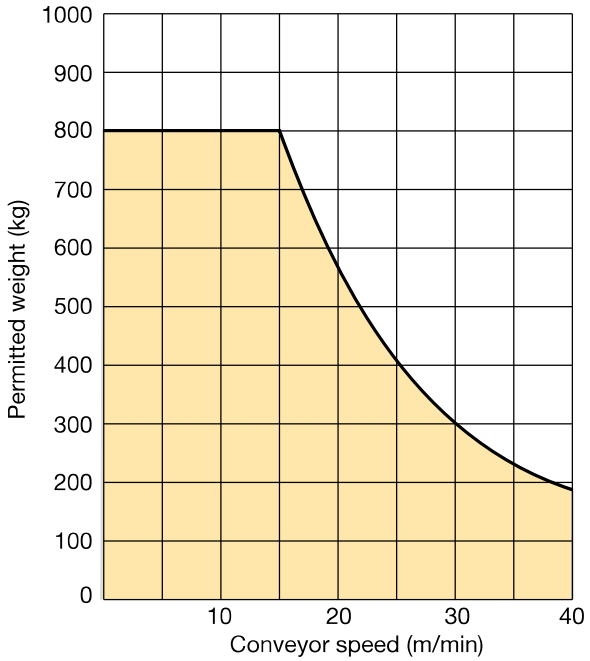

Axial load subject to operating pressure — Type STVSR-80-40

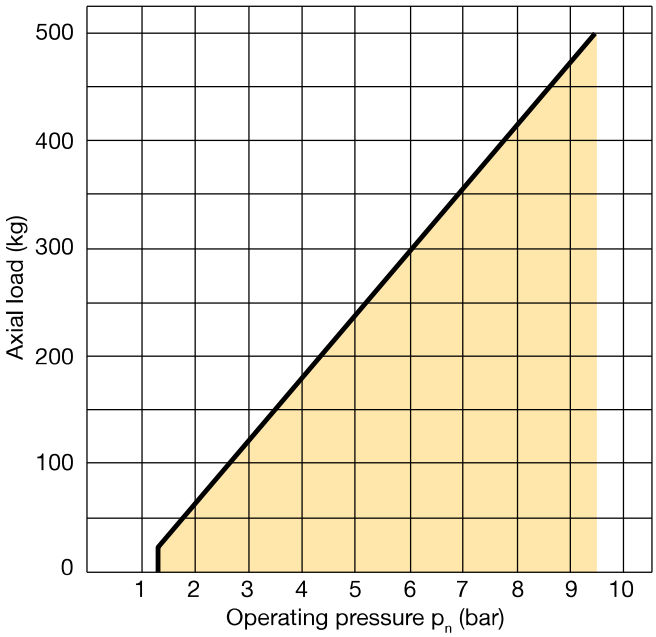

STVDR Series - Stop cylinder Ø 50mm - Vertical version

Order Key

STVDR - 50 - 30 - STD

	Connecting thread
STD	Standard G1/8
NPT	National Pipe Thread 1/8"

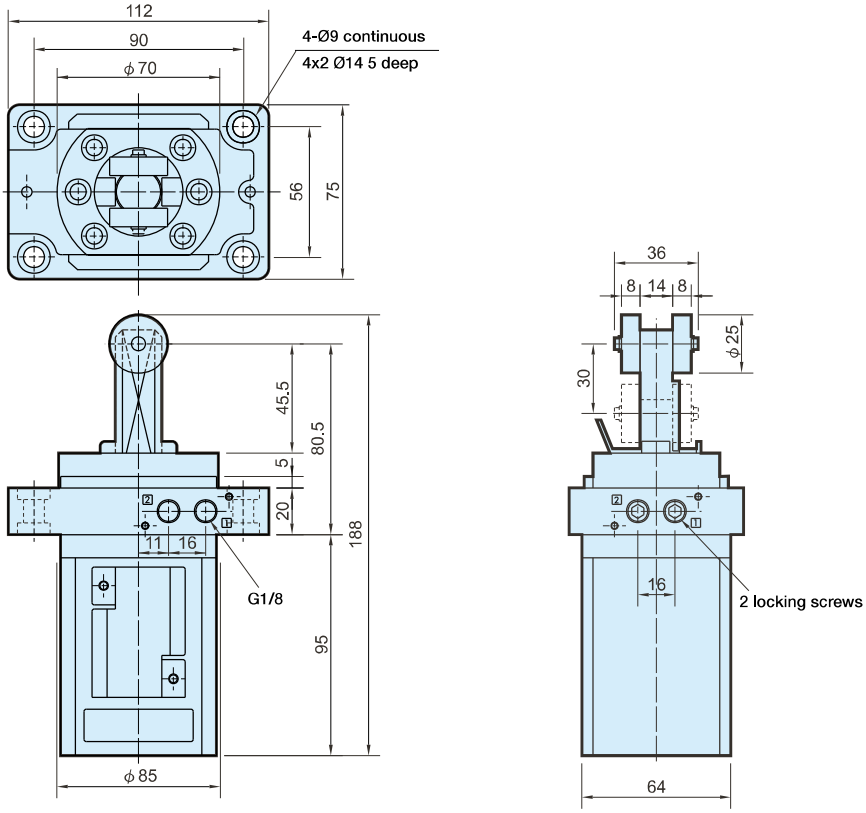

Loads - Moving mass subject to speed — Type STVDR-50-30

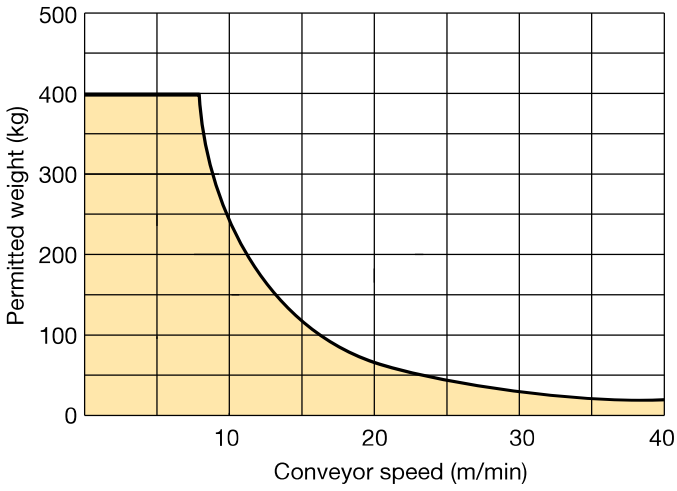

Axial load subject to operating pressure — Type STVDR-50-30

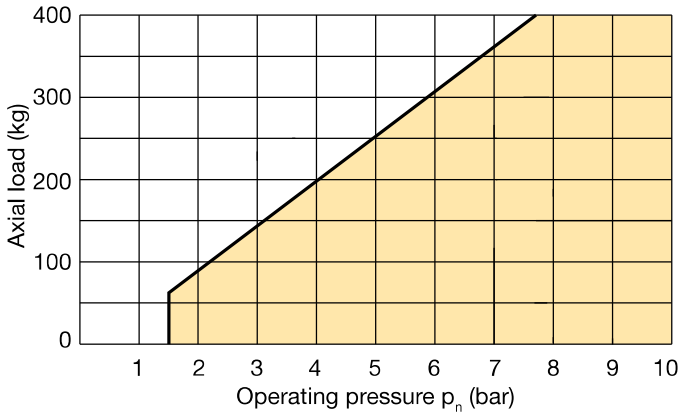

STVSR Series - Stop cylinder Ø 80mm - Vertical version

Order Key

STVD - 50 - 30 - STD

	Connecting thread
STD	Standard G1/8
NPT	National Pipe Thread 1/8"

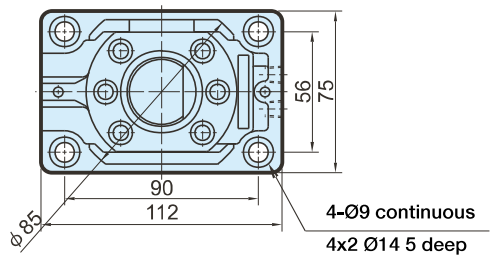

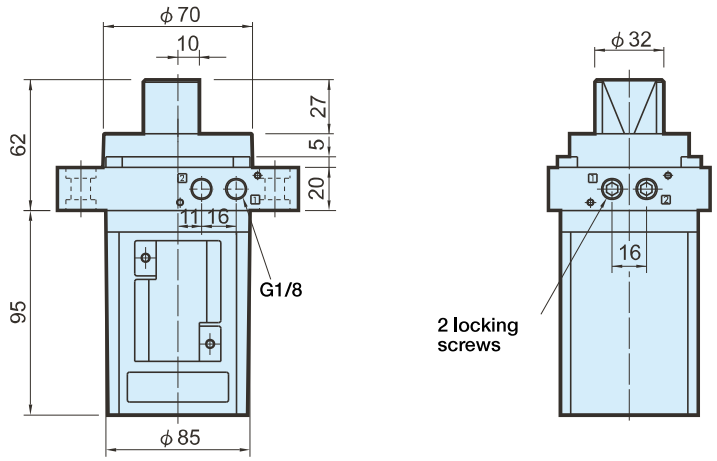

Loads - Moving mass subject to speed — Type STVD-50-30

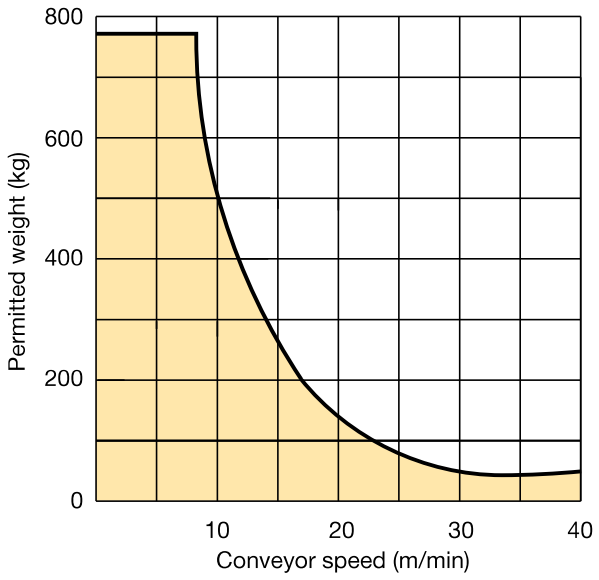

Axial load subject to operating pressure — Type STVD-50-30

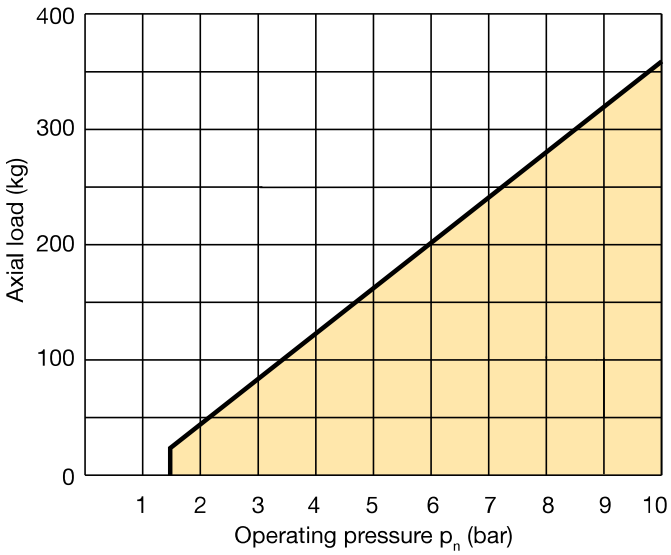

STHSR Series - Stop cylinder Ø 50mm - Horizontal version

Order Key

STHSR - 50 - 50 - STD

	Connecting thread
STD	Standard G1/4
NPT	National Pipe Thread 1/4”

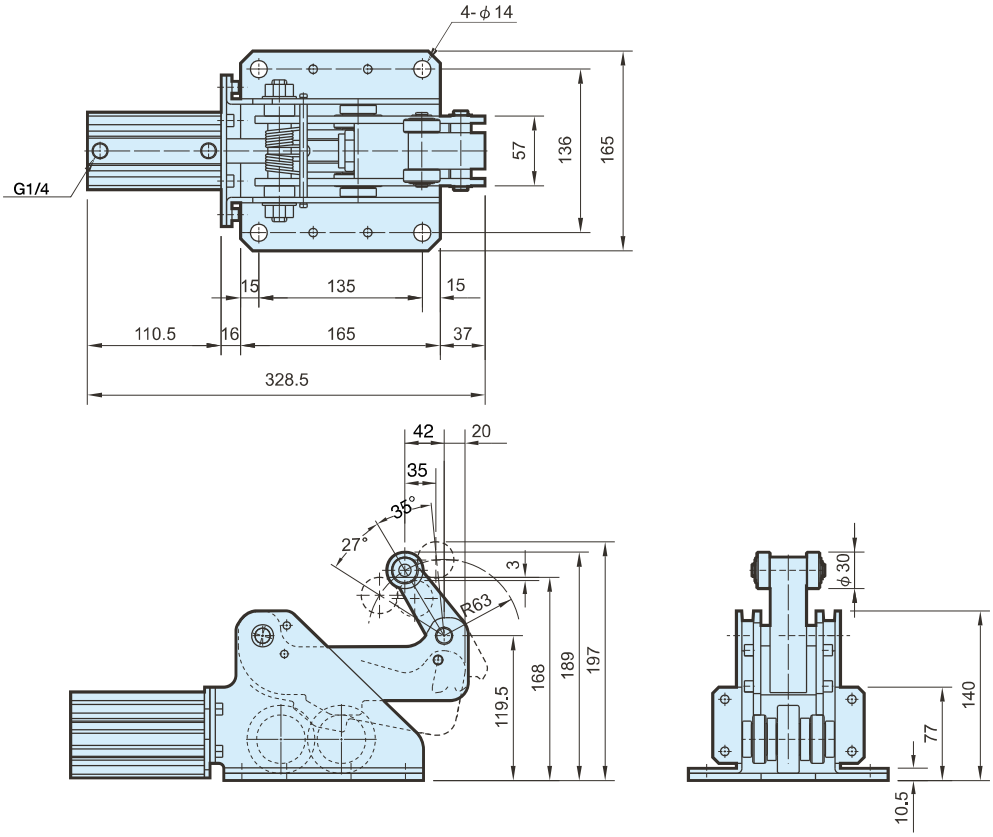

Loads - Moving mass subject to speed — Type STHSR-50-50

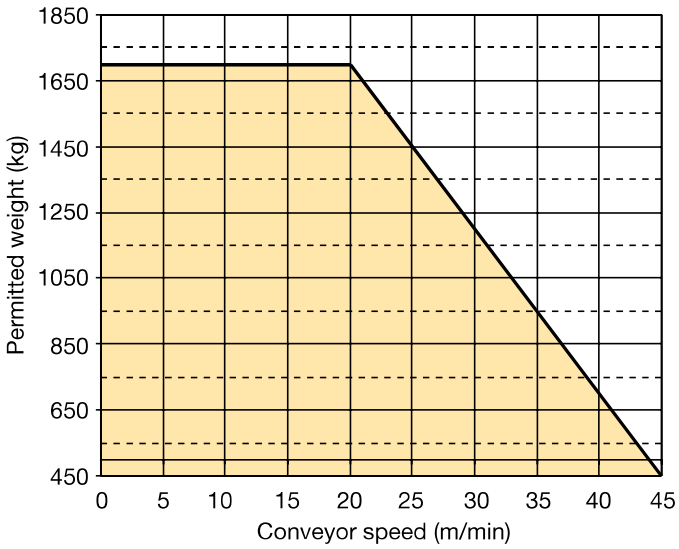

Axial load subject to operating pressure — Type STHSR-50-50

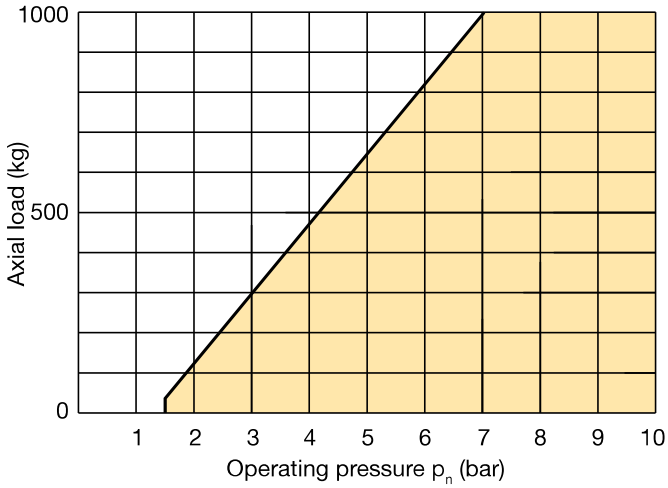

P5T cylinders are a modern and versatile range of cylinders with integral guides. The cylinders are double-acting, with end stop cushioning for quiet and vibration free operation. The strong guide shafts make it possible to adsorb considerable thrust forces and torque.

- Complete cylinder function with integral guidance
- Stainless steel guide rods
- Wide range of standard strokes, diameter 16-100 mm
- Flexible porting as standard
- Magnetic piston as standard with drop-in sensor technology
- End stop cushions as standard

Operating information

Working pressure	Max 10 bar
Working temperature	-20 °C to +80 °C

Prelubricated, further lubrication is not normally necessary.
If additional lubrication is introduced it must be continued.

For more information see www.parker.com/euro_pneumatic

Double acting - Plain bearing and top air connections

Ø16mm - (M5)

Stroke.mm	Order code
10	**P5T-C016DGSN010**
25	**P5T-C016DGSN025**
40	**P5T-C016DGSN040**
50	**P5T-C016DGSN050**
75	**P5T-C016DGSN075**
100	**P5T-C016DGSN100**

Ø20mm - (G1/8)

Stroke.mm	Order code
25	**P5T-C020DGSN025**
40	**P5T-C020DGSN040**
50	**P5T-C020DGSN050**
75	**P5T-C020DGSN075**
100	**P5T-C020DGSN100**
125	**P5T-C020DGSN125**

Ø25mm - (G1/8)

Stroke.mm	Order code
25	**P5T-C025DGSN025**
50	**P5T-C025DGSN050**
75	**P5T-C025DGSN075**
100	**P5T-C025DGSN100**
125	**P5T-C025DGSN125**
150	**P5T-C025DGSN150**

Ø32mm - (G1/8)

Stroke.mm	Order code
25	**P5T-C032DGSN025**
50	**P5T-C032DGSN050**
75	**P5T-C032DGSN075**
100	**P5T-C032DGSN100**
125	**P5T-C032DGSN125**
150	**P5T-C032DGSN150**
175	**P5T-C032DGSN175**
200	**P5T-C032DGSN200**

Ø40mm - (G1/8)

Stroke.mm	Order code
25	**P5T-C040DGSN025**
50	**P5T-C040DGSN050**
75	**P5T-C040DGSN075**
100	**P5T-C040DGSN100**
125	**P5T-C040DGSN125**
150	**P5T-C040DGSN150**
175	**P5T-C040DGSN175**
200	**P5T-C040DGSN200**

Ø50mm - (G1/4)

Stroke.mm	Order code
25	**P5T-C050DGSN025**
50	**P5T-C050DGSN050**
75	**P5T-C050DGSN075**
100	**P5T-C050DGSN100**
125	**P5T-C050DGSN125**
150	**P5T-C050DGSN150**
175	**P5T-C050DGSN175**
200	**P5T-C050DGSN200**

Ø63mm - (G1/4)

Stroke.mm	Order code
25	**P5T-C063DGSN025**
50	**P5T-C063DGSN050**
75	**P5T-C063DGSN075**
100	**P5T-C063DGSN100**
125	**P5T-C063DGSN125**
150	**P5T-C063DGSN150**
175	**P5T-C063DGSN175**
200	**P5T-C063DGSN200**

Ø80mm - (G3/8)

Stroke.mm	Order code
25	**P5T-C080DGSN025**
50	**P5T-C080DGSN050**
75	**P5T-C080DGSN075**
100	**P5T-C080DGSN100**
125	**P5T-C080DGSN125**
150	**P5T-C080DGSN150**
175	**P5T-C080DGSN175**
200	**P5T-C080DGSN200**

Ø100mm - (G3/8)

Stroke.mm	Order code
25	**P5T-C100DGSN025**
50	**P5T-C100DGSN050**
75	**P5T-C100DGSN075**
100	**P5T-C100DGSN100**
125	**P5T-C100DGSN125**
150	**P5T-C100DGSN150**
175	**P5T-C100DGSN175**
200	**P5T-C100DGSN200**

Design Variants

In addition to the standard designs, a number of variants of the P5T range are available to special order, to provide effective solutions in a large number of applications.

Cylinders with special strokes
Cylinders with two fixing plates
Cylinders with adjustable stops, with cushioning
High-temperature cylinders for the temperature range of -10°C to +150°C (not magnetic piston).

Special design for food industry applications

There is a special version of the P5T for food industry applications and other installation cases where high corrosion resistance and hygiene are required. This version has steel parts and other components in either stainless steel or special treated aluminium.
Please contact Customer Service for more information.

Plain bearing or recirculating ball bearings

The P5T is supplied with plain bearings as standard. This type of bearing has guide rods of greater diameter, providing excellent support for heavy loads, especially static loads. Plain bearings are highly tolerant of vibration and dirt, and are suitable for regular cleaning.
Recirculating ball bearings are used for applications which require high precision and low friction.

The choice should be based on the following factors:

Application requirements	Plain bearing	Recirculating ball bearings
Precision	Good	Excellent
Friction	Higher	Low
Coefficient of friction	Variable	Constant
Precision during service life	Variable	Constant
Static load capacity	Excellent	Good
Dynamic load capacity	Good, but with friction losses	Good
Vibration tolerance	Excellent	Average
Dirt tolerance	Excellent	Poor
Washing tolerance	Excellent	Poor

Double acting, connections on top.

Double acting with two fixing plates, side connections are recommended.

Double acting, connections at rear.

Double acting with two fixing plates and adjustable end stops with cushioning, side connections are recommended.

Double acting, connections on side.

Double acting with one fixing plate adjustable end stops with cushioning, connections on side, on top or at rear.

Dimensions, P5T basic cylinder

Connection option **D**
(connection from the top

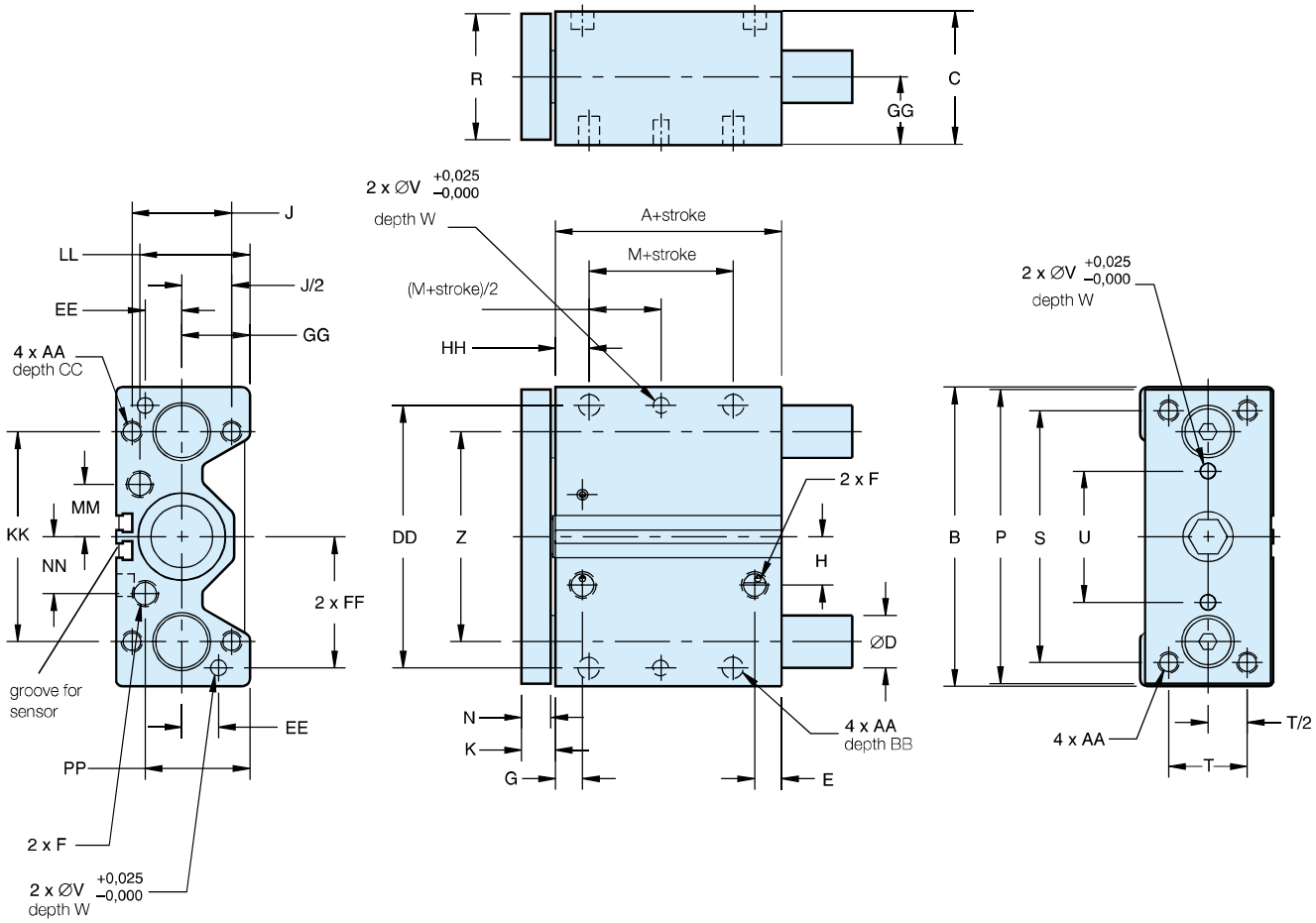

Cylinder diam. mm	A mm	B mm	C mm	D1*) mm	D2*) mm	E mm	F	G mm	H mm	J mm	K mm	M mm	N mm	P mm	R mm	S mm	T mm	U mm	V mm
16	37,8	64	31	8	10	10,1	M5	10,1	7	22	9,9	7	7,9	62	25,4	52	16	20	3
20	35	74	36	10	12	19	G1/8	10	15,8	26	9,9	10	7,9	72	31,8	60	18	30	4
25	38	88	42	12	16	21	G1/8	11,4	15,5	32	9,9	10	7,9	86	38	70	26	34	4
32	36	114	51	16	20	10,3	G1/8	10,4	18,4	38	13,1	5	11,1	112	44,5	96	30	50	6
40	44	124	51	16	20	12,1	G1/8	14,9	22,5	38	13,1	10	11,1	122	44	106	30	60	6
50	44,9	140	62	20	25	14,5	G1/4	16,1	27	44	14,7	10	12,7	138	57	120	40	60	8
63	50,1	150	75	20	25	16,4	G1/4	14,5	33	44	14,7	10	12,7	148	70	130	50	72	8
80	59,5	188	95	25	30	17,5	G3/8	19	37	56	18	15	16	185	88,9	160	60	92	10
100	66**)	224	115	30	35	21,9**)	G3/8	23	40	62	18	15	16	221	108	190	80	114	10

Cylinder diam. mm	W mm	Z mm	AA	BB mm	CC mm	DD mm	EE mm	FF mm	GG mm	HH mm	KK mm	LL mm	MM mm	NN mm	PP mm	Piston rod Ø mm
16	6	42	M5x0,8	7,5	10	54	8	27	15	13,1	42	22,5	11,3	9,7	23	8
20	6	52	M5x0,8	7,5	10	64	10	32	17	13,1	52	26	15,4	15,4	26	10
25	6	62	M6x1,0	10	12	76	11	38	21	14,1	62	33,4	17	17	33,4	10
32	6	80	M8x1,25	11	16	100	14	50	26	12,9	80	42	20	21,7	38	16
40	6	90	M8x1,25	11	16	110	14	55	26	13,9	90	41	24	26,4	37,9	16
50	8	100	M10x1,5	12	20	124	16	62	30	14,3	100	51	29	33	44	20
63	8	110	M10x1,5	15	20	132	18	66	36,5	16,3	110	62	36	37,8	57,8	20
80	10	140	M12x1,75	18	24	166	22	83	46,5	21	140	78	45	48	75,5	25
100	10	170	M14x2,0	21	28	200	24	100	56,5	25	170	91,5	53	51	95.5	25

Length tolerance ± 1 mm
Stoke tolerance + 1.5/0 mm
**) Stroke 25 mm, A=75 mm, E=28 mm

*) D1 = bearing rod diameter for recirculating ball bearing
*) D2 = bearing rod diameter for plain bearing

Dimensions, P5T basic cylinder

Standard lengths

Cylinder diam mm	Stroke mm	L mm
16	10	36,2
	25, 40, 50, 75	60,2
	100	75,2
20	25, 40, 50, 75	66,9
	100, 125	91,9
25	25, 50, 75, 100	69,9
	125, 150	91,9
32	25, 50, 75, 100	77,9
	125, 150, 175, 200	116,0
40	25, 50, 75, 100	77,9
	125, 150, 175, 200	116,0
50	25, 50, 75, 100	84,0
	125, 150, 175, 200	124,1
63	25, 50, 75, 100	84,0
	125, 150, 175, 200	124,1
80	25, 50, 75, 100	101,8
	125, 150, 175, 200	140,0
100	25	122,8
	50, 75, 100	120,3
	125, 150, 175, 200	158,4

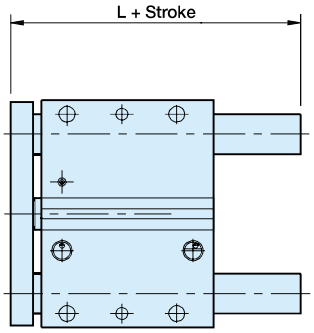

Dimensions, P5T basic cylinder

Connection option **S** (side connections)

Cylinder diam. mm	SS mm	TT mm	UU mm	F
16	24,1	10	20	M5
20	29,2	10	20	M5
25	35,2	11,4	25	M5
32	41,7	10,4	34	G1/8
40	41,7	14,9	34	G1/8
50	51,3	16,1	38	G1/4
63	60,7	15,6	41,8	G1/4
80	75,5	19	47	G3/8
100	83,7	23	53,3	G3/8

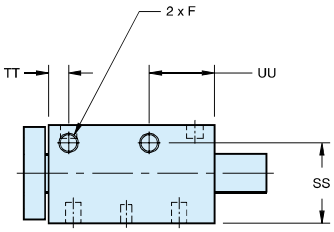

Please note that load capacity increases with two fixing plates, due to greater bearing distance.

Cylinder diam. mm	Guide rod dia, mm	X for option D mm	A mm	E mm	QQ mm	RR mm	XX mm
16	8	57,6	70,6	62,7	18,0	13,0	0
	10	57,6	70,6	62,7	24,0	13,0	1
20	10	54,9	67,9	59,9	24,0	13,0	1
	12	54,9	72,6	64,6	28,0	17,7	3
25	12	57,8	75,5	67,6	28,0	17,7	1
	16	57,8	77,5	69,6	34,0	19,7	4
32	16	62,2	81,9	70,8	34,0	19,7	0
	20	62,2	83,9	72,8	41,4	21,7	3,7
40	16	70,2	89,9	78,8	34,0	19,7	0
	20	70,2	91,9	80,8	41,4	21,7	3,7
50	20	74,3	96,0	83,3	41,4	21,7	0,7
	25	74,3	96,0	83,3	50,8	21,7	5,4
63	20	79,5	101,2	88,5	41,4	21,7	0,7
	25	79,5	101,2	88,5	50,8	21,7	5,4
80	25	95,5	117,2	101,2	50,8	21,7	1,4
	30	95,5	117,2	101,2	60,5	21,7	6,3
100	30	102,0	123,7	107,7	60,5	21,7	3,3
	35	102,0	123,7	107,7	65,0	21,7	5,5

Dimensions, P5T basic cylinder

Option **D**

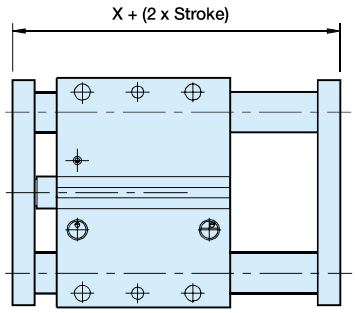

Dimensions, P5T with two fixing plates and adjustable end stop with cushioning

Option **A**

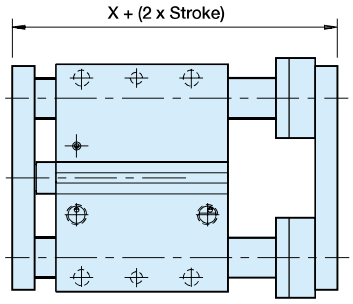

Dimensions, P5T with adjustable end stop with cushioning

Option **E**

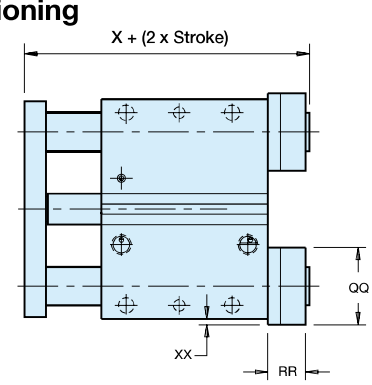

Twin Rod Non Rotate Cylinders RDV and AZ

A range of twin rod cylinders designed for use in non rotate applications specifially suited to the handling and packaging environments. Offering a range of double acting cylinders with adjustable cushioning and magnetic variants.

RDV Series:

- Available as bore Ø 25mm
- Non rotating
- Double acting
- Adjustable cushioning
- Magnetic piston as standard

Operating information

Working pressure:	Max 10 bar
Working temperature:	-10°C to +70°C

Prelubricated, further lubrication is not normally necessary.
If additional lubrication is introduced it must be continued.

AZ Series:

- Available as bore Ø 32mm - Ø 100mm
- Non rotating
- Double acting
- Adjustable cushioning
- Magnetic piston as standard
- Drop in sensors

Operating information

Working pressure:	Max 10 bar
Working temperature:	-20°C to +80°C

Prelubricated, further lubrication is not normally necessary.
If additional lubrication is introduced it must be continued.

Order key - RDV

R D V 5 0 2 5 0 1 0 0

Version	
RDV	Ø25mm bore only

Function	
5	Double acting with magnetic function, Adjustable cushioning

Bore mm
025

Stroke (mm) e.g. 0100 = 100mm
Stroke lengths up to 500mm. Other sizes on request

Note:
Standard option specified.Other options available
Maximum 500mm

Order key - AZV, AZ3, AZ4

A 5 5 K 0 1 0 0 / 0 0 0 A A A A 0 0 0 0 A 0 0 0 0

Version		
5	AZV	Single set twin rods
6	AZ4	Double set twin rods
7	AZ3	Single set twin rods with single rod

Function	
1	Double acting, No magnetic function, Adjustable cushioning
2	Double acting, No magnetic function, No adjustable cushioning
5	Double acting, With magnetic function, Adjustable cushioning
6	Double acting, With magnetic function, No adjustable cushioning

Bore mm	
K	032
L	040
M	050
N	063
P	080
Q	100

Stroke (mm) e.g. 0100 = 100mm
Stroke lengths up to 500mm. Other sizes on request

Note:
Standard option specified.
Other options available
Maximum 2000mm

Twin Rod Cylinder Cylinder Mounts

Body Mounts	RDV	AZV / AZ3 / AZ4 Bore Ø					
	25mm	32mm	40mm	50mm	63mm	80mm	100mm
Foot mounting - MS3 / MS1	**KK28.302**	**PD27917**	**PD27918**	**PD28072**	**PD28073**	**PD28074**	**PD28075**
Rear Double Clevis - AB3 / MP2	**KZ1420**	**PD22704**	**PD22705**	**PD22706**	**PD22707**	**PD22708**	**PD22709**
Rear Single Clevis - MP4	**-**	**PD23412**	**PD23413**	**PD23414**	**PD23415**	**PD23416**	**PD23417**
Front Flange - Type MF1 for AZV / AZ3 / AZ4	**-**	**PD57042**	**PD57043**	**PD57044**	**PD57045**	**PD57046**	**PD57047**
Rear Flange - MF2	**-**	**PD23403**	**PD23404**	**PD23405**	**PD23406**	**PD23407**	**PD23408**
Trunnion - MT4	**-**	**PD39195**	**PD39196**	**PD39197**	**PD39198**	**PD39199**	**PD39200**
Trunnion Blocks - MT4	**-**	**PD23381**	**PD23382**	**PD23382**	**PD23383**	**PD23383**	**PD23384**
Pivot Mount - (w / o Bolts)	**-**	**PD25621**	**PD25622**	**PD25623**	**PD25624**	**PD25625**	**PD25626**
Groove Nut - for RDV5	**ZP2125**						

Delivery information: All mounts are sold separately and are not mounted for shipment, except for the trunnion mount which requires factory installation.

Rod Accessories	AZ3 Bore Ø					
	32mm	40mm	50mm	63mm	80mm	100mm
Rod Nut	**ZP 1810**	**ZP 2189**	**ZP 0178**	**ZP 0178**	**ZP 0185**	**ZP 0185**
Rod Clevis AP2	**KY 6135**	**KY 6136**	**KY 6139**	**KY 6139**	**KY 6141**	**KY 6141**
Rod Eye AP6	**KY 6147**	**KY 6148**	**KY 6150**	**KY 6150**	**KY 6151**	**KY 6151**
Clevis Pin	**KY 6153**	**KY 6154**	**KY 6157**	**KY 6156**	**KY 6158**	**KY 6159**
Flexo coupling	**KY 1129**	**KY 1131**	**KY 1133**	**KY 1133**	**KY 1134**	**KY 1134**

Weights (kg)

	RDV		AZV Bore Ø											
	25mm		32mm		40mm		50mm		63mm		80mm		100mm	
	*1	*2	*1	*2	*1	*2	*1	*2	*1	*2	*1	*2	*1	*2
Basic Cylinder	0.46	0.11	0.80	0.25	1.00	0.35	1.70	0.5	2.60	0.6	4.20	0.9	6.20	1.0
Type MS3 / MS1	0.10		0.95		1.19		2.04		2.99		4.99		7.20	
Type AB3 / MP2	0.08		0.87		1.09		1.87		2.82		4.69		6.94	
Type MP4			0.90		1.13		1.91		2.90		4.77		7.11	
Type MP6			0.90		1.15		1.92		2.92		4.76		7.06	
Type MF1 / MF2			0.90		1.15		1.92		2.92		4.76		7.06	
Type MT4			0.91		1.18		1.93		3.25		5.03		7.76	

	AZ3											
Basic Cylinder	1.0	0.30	1.5	0.45	2.5	0.7	3.2	0.85	5.3	1.3	7.5	1.5
Type MS1	0.95		1.19		2.04		2.99		4.99		7.20	
Type MF1 / MF2	0.90		1.15		1.92		2.92		4.76		7.06	
Type MT4	0.91		1.18		1.93		3.25		5.03		7.76	

	AZ4											
Basic Cylinder	1.0	0.30	1.4	0.40	2.3	0.6	3.2	0.9	5.6	1.4	7.4	1.50
Type MS1	1.15		1.59		2.64		3.59		6.39		8.40	
Type MT4	1.11		1.58		2.53		3.59		6.13		8.16	

*1 = Weight for cylinder with 100mm stroke
*2 = Weight for every additional 100mm stroke length

Dimensions – Double acting, non-rotating, Ø 25 mm

Series RDV5...

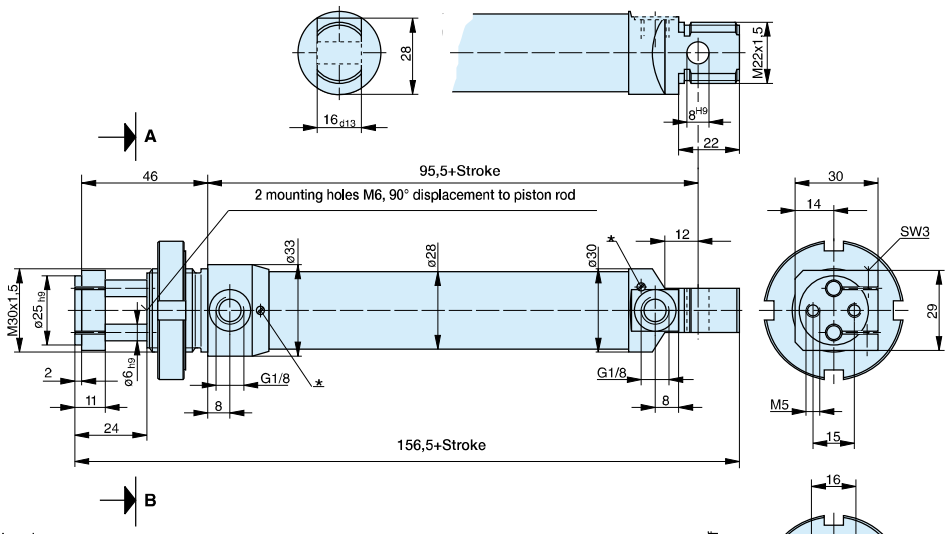

* adjustable end cushioning
Mounting nut is not included in delivery

Section A – B

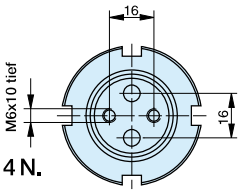

Mounting instruction:
When mounting the front plate onto the piston rods tighten the screws with a torque M_a = 4 N.

Mountings – Series RDV...., Ø 25 mm

Dimensions (mm) – Foot mounting type MS3

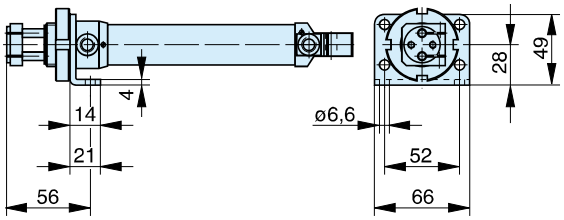

Material:
steel, passivated

Dimensions (mm) – Clevis bracket type AB3

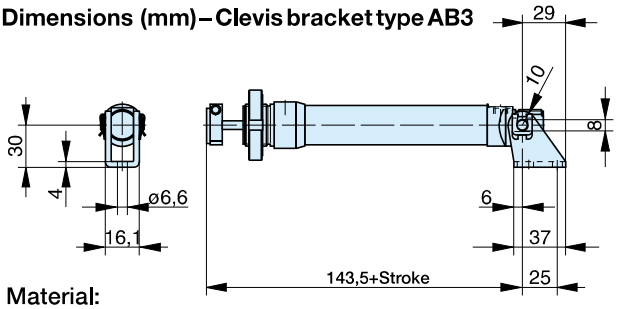

Material:
steel, passivated

Dimensions – Basic Cylinder, non-rotating, Series AZV...., Ø 32 – 100 mm

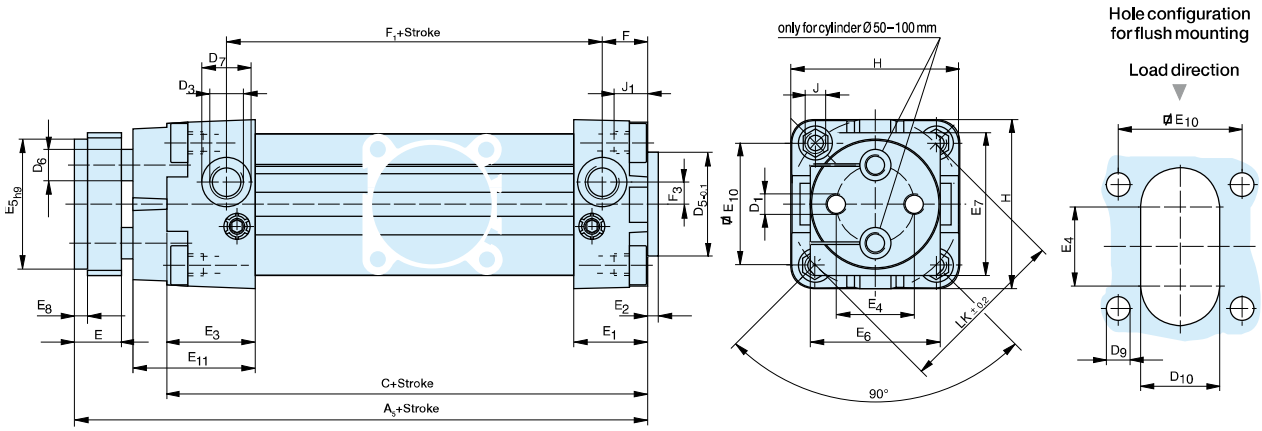

Dimension Table (mm) – Basic Cylinder AZV...., AZ3...., AZ4....

Cyl. Ø	A_5 + Stroke	A_9 + 2x Stroke	A_{10} + Stroke	A_{11} + 2x Stroke	C + Stroke	D_1	D2	D_3	ØD_5	ØD_6	ØD_7	ØD_8	ØD_9	D_{10}	E	E_1	E_2	E_3
32	128	154	146	154	102	M6	M10x1.25	G1/8	30	8	15	12	7	23	15	29	4	26
40	142	172	163	172	112	M8	M12x1.25	G1/4	35	10	19	16	7	25	15	27	4	30
50	151	188	177	185	117	M8	M16x1.5	G1/4	40	12	19	20	9	30	18	29	4	34
63	161	198	187	197	125	M10	M16x1.5	G3/8	45	16	23	20	9	34	22	30	4	34
80	174	220	206	212	136	M12	M20x1.5	G3/8	45	20	23	25	10	38	22	34	4	39
100	181	232	218	219	143	M12	M20x1.5	G1/2	55	20	28	25	10	38	22	35	4	40

Dimensions – Basic Cylinder, non-rotating, with through piston rod, series AZ3...., Ø 32 – 100 mm

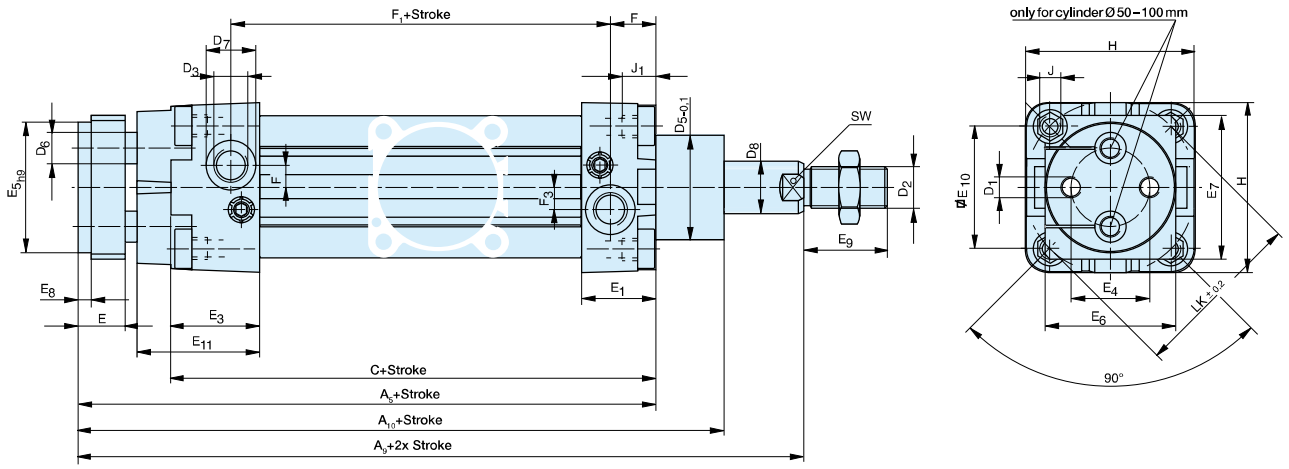

Dimensions – Basic Cylinder, non-rotating, with through piston rods, series AZ4...., Ø 32 – 100 mm

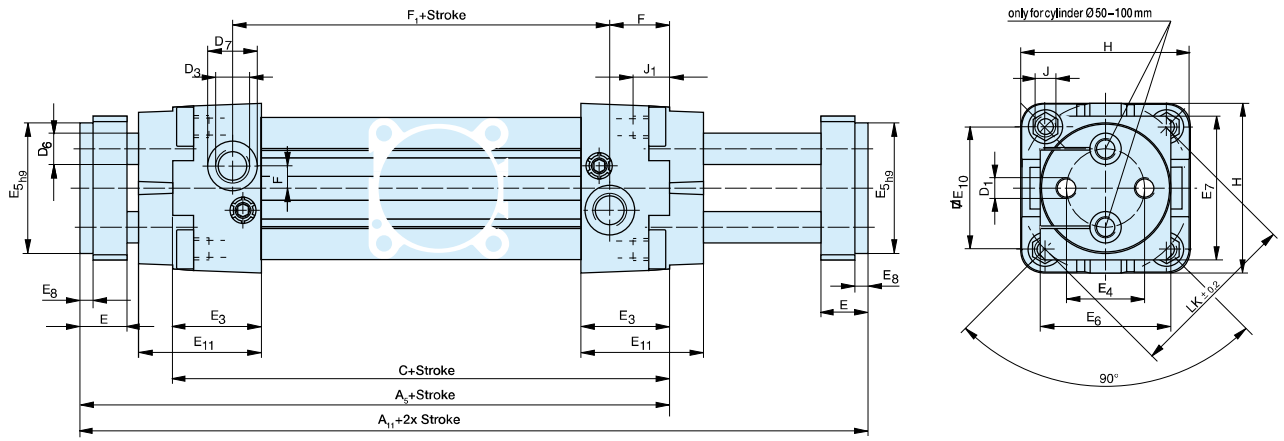

Dimension Table (mm) – Basic Cylinder AZV...., AZ3...., AZ4....

Cyl. Ø	A_5 + Stroke	A_9 + 2x Stroke	A_{10} + Stroke	A_{11} + 2x Stroke	C + Stroke	D_1	D2	D_3	$ØD_5$	$ØD_6$	$ØD_7$	$ØD_8$	$ØD_9$	D_{10}	E	E_1	E_2	E_3
32	128	154	146	154	102	M6	M10x1.25	G1/8	30	8	15	12	7	23	15	29	4	26
40	142	172	163	172	112	M8	M12x1.25	G1/4	35	10	19	16	7	25	15	27	4	30
50	151	188	177	185	117	M8	M16x1.5	G1/4	40	12	19	20	9	30	18	29	4	34
63	161	198	187	197	125	M10	M16x1.5	G3/8	45	16	23	20	9	34	22	30	4	34
80	174	220	206	212	136	M12	M20x1.5	G3/8	45	20	23	25	10	38	22	34	4	39
100	181	232	218	219	143	M12	M20x1.5	G1/2	55	20	28	25	10	38	22	35	4	40

Cyl. Ø	$ØE_4$	E_{5h9}	E_6	E_7	E_8	E_9	E_{10}	E_{11}	F AZV, AZ3	F AZ4	F_1+Stroke AZV, AZ3	F_1+Stroke AZ4	F_3 AZV, AZ4	F_3 AZ3	F_4	J	J_{1max}	H	ØLK	SW
32	19	32	32	40	4	20	32.5	34	14.5	17.5	74	75	6	6	6	M6	16	47	46	10
40	22.5	40	40	45	4	24	38	42	16	19	77.5	75	7	7	7	M6	16	53	54	14
50	30	50	50	55	5	32	46.5	47	17.5	23	77	72	9.5	9.5	9.5	M8	16	65	66	17
63	38	63	63	70	5	32	56.5	45	17.5	21.5	87	83	10	10	10	M8	16	75	80	17
80	50	80	80	95	5	40	72	52	20.5	26	90	85	9	9	9	M10	16	95	102	22
100	70	100	100	115	5	40	89	53	19	24.5	100	95	13	13	13	M10	16	115	126	22

Mountings – Series AZV...., AZ3...., AZ4...., Ø 32 – 100 mm

Dimensions for foot mounting MS1

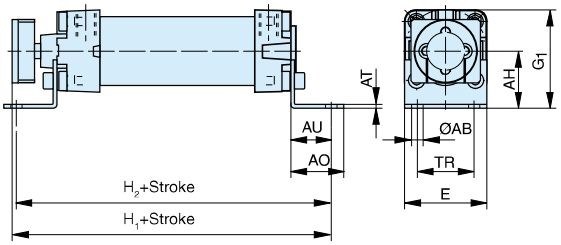

Material: steel, passivated

Dimension Table (mm)

Cyl. Ø	E	G_1	H_1 + Stroke	H_2 + Stroke	AH	ØAB	AO	AT	AU	TR
32	47	55.5	152	150	32	7	32	4	24	32
40	53	62.5	170	168	36	9	38	4	28	36
50	65	77.5	183	181	45	9	42	5	32	45
63	75	87.5	193	189	50	9	42	5	32	50
80	95	110.5	215	218	63	12	55	6	41	63
100	115	128.5	222	225	71	14	56	6	41	75

Included in delivery: 2 foot brackets, 4 screws

Dimensions for clevis bracket MP4

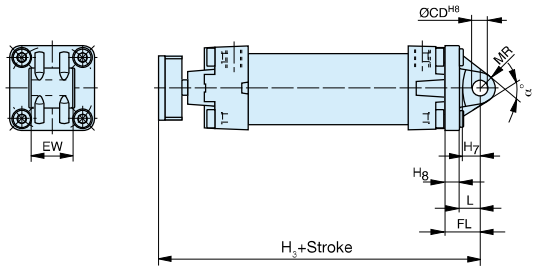

Material: cast aluminium

Dimension Table (mm)

Cyl. Ø	H_3 + Stroke	H_7	H_8	L	ØCD H8	FL	MR	EW	a°
32	150	10	10	12	10	22	10.5	26	60
40	167	13	10	15	12	25	13	28	60
50	178	12	11	16	12	27	13	32	70
63	193	17	11	21	16	32	17	40	60
80	210	16	15	21	16	36	17	50	70
100	222	20.5	16	25	20	41	21	60	70

Included in delivery: 1 clevis bracket, 4 screws

Dimensions for clevis bracket MP2

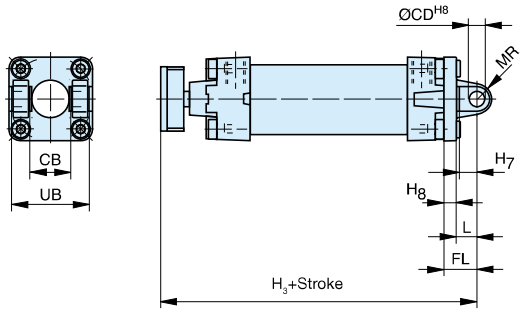

Material: cast aluminium

Dimension Table (mm)

Cyl. Ø	H_3 + Stroke	H_7	H_8	L	CB	ØCD H8	FL	MR	UB
32	150	10	10	12	26	10	22	9	45
40	167	13	10	15	28	12	25	11	52
50	178	12	11	16	32	12	27	12	60
63	193	17	11	21	40	16	32	15	70
80	210	16	15	22	50	16	36	16	90
100	222	20.5	16	25	60	20	41	20	110

Included in delivery: 1 rear trunnion mounting, 4 screws

Dimensions for Swivel eye bracket MP6
(Rear mounting with spherical bearing)

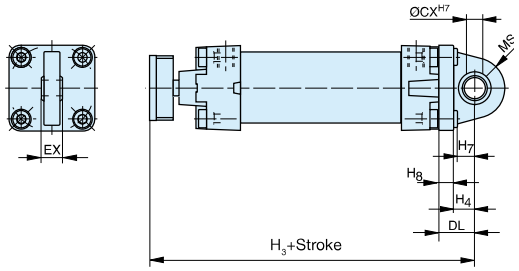

Material: cast aluminium

Dimension Table (mm)

Cyl. Ø	H_3 + Stroke	H_4	H_7	H_8	ØCX H7	DL	EX	MS
32	150	12	10	10	10	22	14	18
40	167	15	13	10	12	25	16	21
50	178	16	12	11	12	27	16	23
63	193	21	17	11	16	32	21	27
80	210	21	16	15	16	36	21	29
100	222	25	20.5	16	20	41	25	34

Included in delivery: 1 rear trunnion mounting with spherical bearing, 4 screws

Mountings – Series AZV ...., AZ3...., AZ4...., Ø 32 – 100 mm

Dimensions for flange mouting MF2

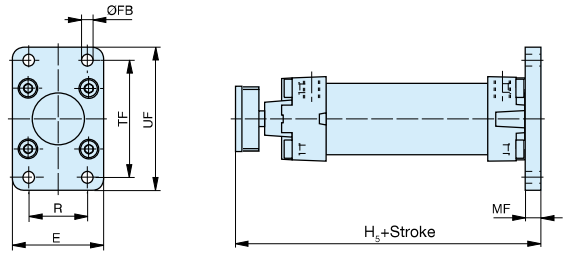

Material: cast aluminium

Dimensions for trunnion mounting MT4
(profile cylinder barrel version)

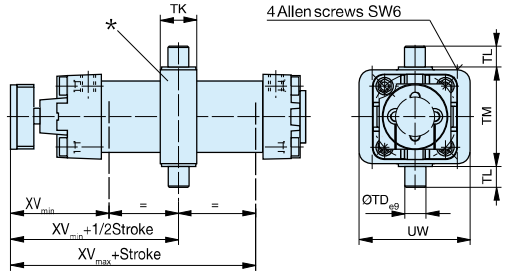

Material: cast aluminium

* Position trunnion mounting
Standard position: Type EN1 – The taps of the EN attachment are horizontally aligned to the air supply
Option: Type EN2 – The taps of the EN attachment are vertically aligned to the air supply

Dimension Table (mm)

Cyl. Ø	E	H_5 + Stroke	R	ØFB	MF	TF	UF
32	50	138	32	7	10	64	79
40	56	152	36	9	10	72	90
50	70	163	45	9	12	90	110
63	77	173	50	9	12	100	120
80	100	190	63	12	16	126	153
100	120	197	75	14	16	150	178

Included in delivery: 1 flange, 4 screws

Dimension Table (mm)

Cyl. Ø	$ØTD_{e9}$	TK	TL	TM	UW	XV_{min}	XV	XV_{max}
32	12	25	12	50	65	64	76	87
40	16	28	16	63	75	75	87	99
50	16	28	16	75	85	84	95	106
63	20	36	20	90	100	89	101	112
80	20	36	20	110	120	96	109	121
100	25	48	25	132	135	99	112	125

Included in delivery: 1 rear trunnion mounting

After loosening the locking screws, the trunnion mounting is infinitely variable between XV_{min} and XV_{max}.

As standard, the position of the T-slots and dovetail slots is on the same side as the air connections. Exception: Ø 32 has only T-slots on the same side as the air connections, with a dovetail slot on the underside.

Mountings – Basic Cylinder, with through piston rod, series AZ3...., Ø 32 – 100 mm

Foot mounting MS1

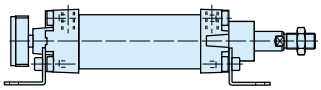

Rear flange mounting MF2

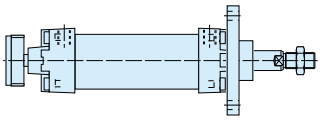

Trunnion mounting MT4

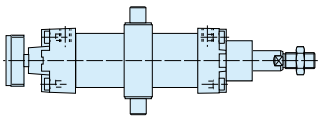

Mountings – Basic Cylinder, with through piston rods, series AZ4...., Ø 32 – 100 mm

Foot mounting MS1

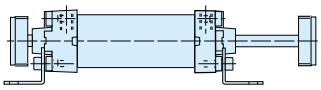

Trunnion mounting MT4

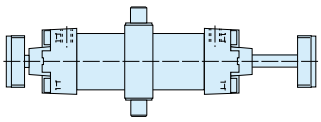

Industrial Shock Absorbers

Adjustable / Non-adjustable

Shock absorbers are hydraulic units that assist in bringing a moving load to rest, quickly and safely, without rebound or backward movement.

They provide a constant linear deceleration with the lowest possible reaction force in the shortest possible stopping time.

- Compact and heavy duty versions
- High energy absorption
- Low return force
- Long service life
- Increases productivity
- Reduces maintenance

Smooth, Controlled Stopping of Moving Loads

Parker shock absorbers prevent damage to moving parts and to machines and plant, destructive impact forces are absorbed by controlled linear deceleration.

Parker shock absorbers let you

- Increase operating speeds
- Increase operating loads
- Increase system performance
- Increase operating reliability
- Reduce stresses on equipment
- Reduce production costs
- Reduce noise levels

All moving parts in a production process have to be stopped without damage to themselves or to the stopping devices of the machines and plant.

The high impact forces have to be reduced in a controlled manner: to bring a moving load to a standstill, the kinetic energy generated by the movement has to be dissipated.
The heavier the moving load and the faster it moves, the higher the kinetic energy.
In automation especially, shorter and shorter cycle times are demanded, so that stopping times are greatly reduced while kinetic energy levels are dramatically increased. These again have to be dissipated in a controlled manner.
Some commonly used stopping devices such as springs, rubber buffers or dashpots actually increase shock loading instead of reducing it - they do not dissipate energy at a uniform rate.

For smooth dissipation of the kinetic energy we recommend the use of hydraulic shock absorbers. Parker shock absorbers convent the kinetic energy generated by the deceleration of the load into thermal energy.
Optimum operating conditions are achieved if the energy is dissipated almost uniformly, i.e. if the moving mass is brought to a halt in the shortest distance, in the shortest time and without sudden peak loads during the stroke.

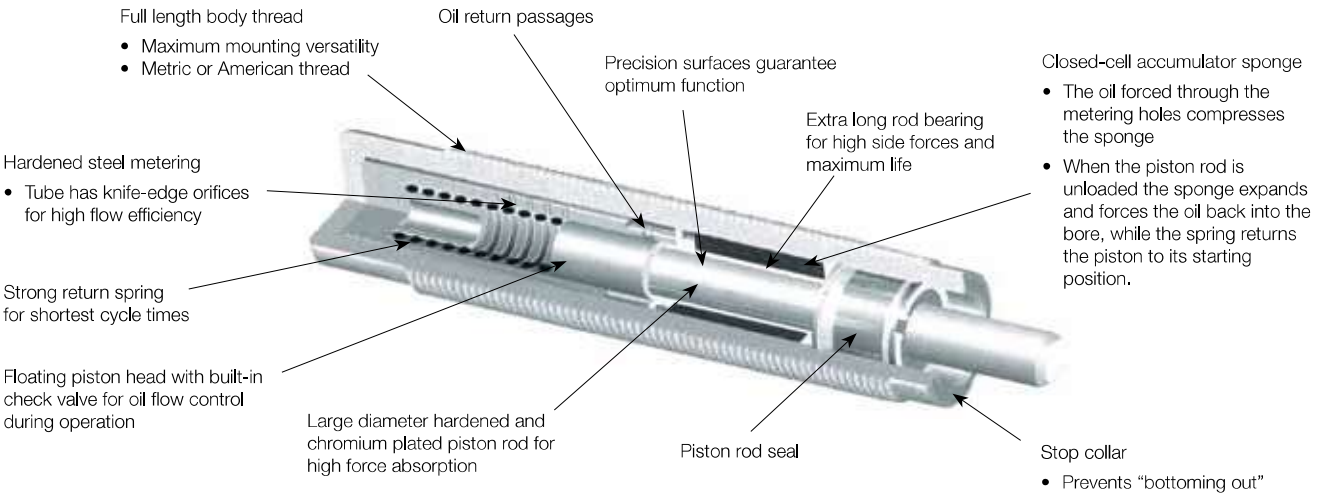

A wide range of applications

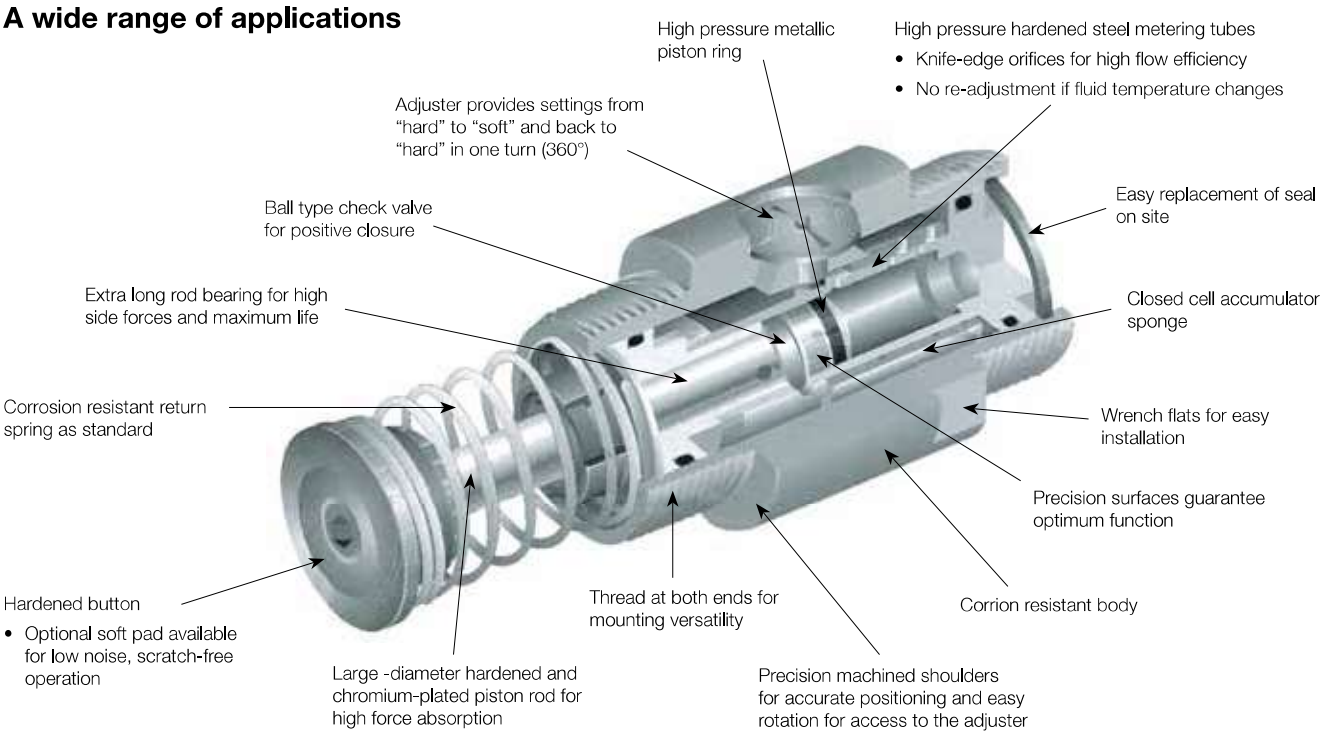

Shock absorption

Ordinary shock absorbers, springs, buffers and pneumatic cushioning cannot match the performance of Parker shock absorbers. These shock absorbers match the speed and mass of the moving object and bring it smoothly and uniformly to rest. Springs and buffers, on the other hand, store energy rather than dissipate it. Although the moving object is stopped, it bounces back and this leads to fatigue in materials and components which can cause premature breakdown of the machine.
Pneumatic cushioning provides a better solution because the energy is actually converted, but because of the compressibility of air the maximum braking force is generated at the end of the stroke, which can lead to excessive loads on components.
Hydraulic dashpots also cause excessive loads because peak resistance comes at the beginning of the stroke and then quickly falls away. This generates unnecessarily high braking forces.

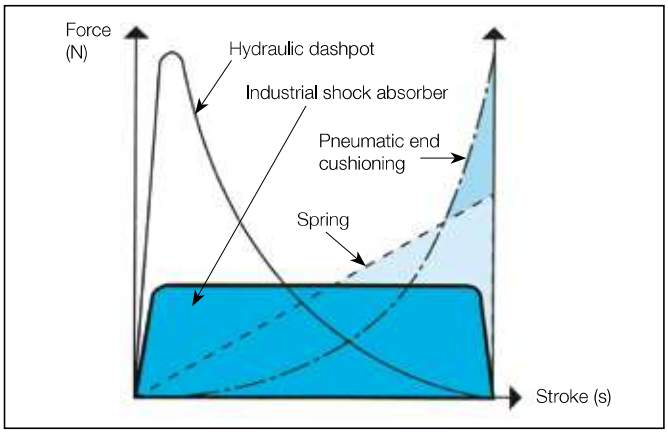

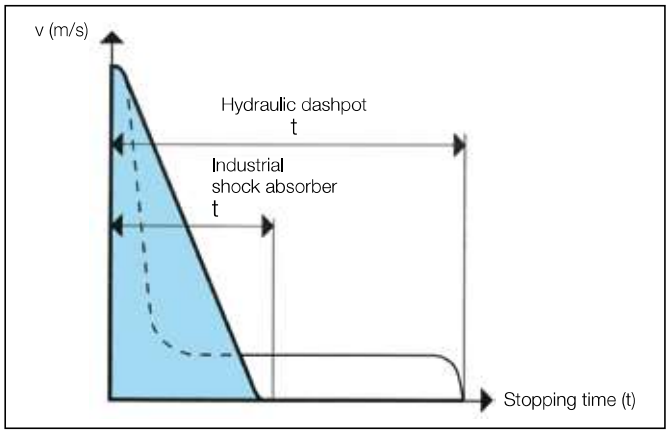

The Force/Stroke Diagram

clearly shows these effects. The shock absorber curve is ideal because all the energy is dissipated by linear deceleration without initial impact or final rebound.

Stopping time

Both damping units stop the same mass from the same speed with the same stroke. Therefore they do the same work but the industrial shock absorber reduces the stopping time by 60 to 70%.

Selection of Shock Absorber Type

Parker shock absorbers are available in two main types, to suit different applications and installation requirements. After selection of the appropriate type, sizing is determined by calculation.

Compact series with full-length body thread

This compact, space-saving series is available in adjustable and non-adjustable versions and can be installed in many different ways, e.g. in a tapped blind hole, in a tapped through hole, in a clearance hole in a flange or bracket, etc.

Universal series

This versatile, adjustable series with various mounting accessories is designed to stop heavier loads. It is especially suited to applications which require several of the same shock absorbers with the same stroke length.

Mounting methods

Parker shock absorbers are designed for a variety of mountings, which can be either built into machines or supplied as accessories.

Accumulators

Normally shock absorbers with internal accumulators are used. This simplifies installation by eliminating external piping and oil storage.
However, in applications with short cycle times and high kinetic energy the oil can become overheated. In this case an external accumulator should be used so that the oil can be cooled in the external circuit.

Shock absorber return stroke

- Piston rod with return spring combined with internal accumulator
- Return stroke actuated by compressed air or mechanically, combined with external accumulator. With this version a delayed return stroke is also possible.

Options

- Stop collars for front or rear mounting - these provide a positive stop to prevent damage caused by the piston “bottoming out”.
  They also allow precise setting of the stroke length.
- Soft pad for the hardened steel button - to avoid surface damage and reduce noise levels.

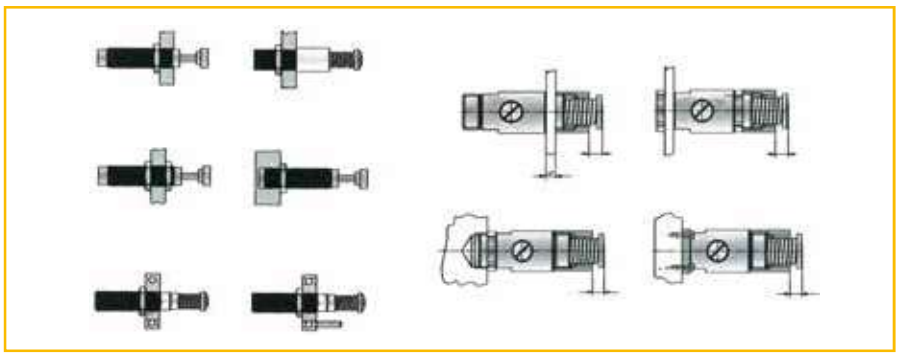

Non-Adjustable Shock Absorbers - SA Series

Type	Stroke [mm]	Effective Mass m_e [kg]		Max Energy Absorption [Nm]		Thread Size	Order code
		Min.	Max.	per stroke W_3	per hour W_4		
SA 10N	6,5	0,7	2,2	2,8	22500	M10x1	**7717FIL**
SA 10SN	6,5	1,8	5,4	2,8	22500	M10x1	**7718FIL**
SA 10S2N	6,5	4,6	13,6	2,8	22500	M10x1	**7721FIL**
SA 12N	10	0,3	1,1	9,0	28200	M12x1	**7719FIL**
SA 12SN	10	0,9	4,8	9,0	28200	M12x1	**7722FIL**
SA 12S2N	10	2,7	36,2	9,0	28200	M12x1	**7723FIL**
SA 14	12,5	0,9	10	17	34000	M14x1,5[1)]	**7720FIL**
SA 14S	12,5	8,6	86	17	34000	M14x1,5[1)]	**7927FIL**
SA 14S2	12,5	68	205	17	34000	M14x1,5[1)]	**7928FIL**
SA 20	12,5	2,3	25	25	45000	M20x1,5	**7930FIL**
SA 20S	12,5	23	230	25	45000	M20x1,5	**7937FIL**
SA 20S2	12,5	182	910	25	45000	M20x1,5	**7938FIL**
SAI 25	25,4	9	136	68	68000	M25x1,5	**7834FIL**
SAI 25S	25,4	113	1130	68	68000	M25x1,5	**7835FIL**
SAI 25S2	25,4	400	2273	68	68000	M25x1,5	**7836FIL**
SA 33x25	25,4	9	40	153	75000	M33x1,5	**8041FIL**
SA 33Sx25	25,4	30	120	153	75000	M33x1,5	**8042FIL**
SA 33S2x25	25,4	100	420	153	75000	M33x1,5	**8043FIL**
SA 33S3x25	25,4	350	1420	153	75000	M33x1,5	**8044FIL**
SA 33x50	50,8	18	70	305	85000	M33x1,5	**8045FIL**
SA 33Sx50	50,8	60	250	305	85000	M33x1,5	**8046FIL**
SA 33S2x50	50,8	210	840	305	85000	M33x1,5	**8047FIL**
SA 33S3x50	50,8	710	2830	305	85000	M33x1,5	**8048FIL**
SA 45x25	25,4	20	90	339	107000	M45x1,5	**8049FIL**
SA 45Sx25	25,4	80	310	339	107000	M45x1,5	**8050FIL**
SA 45S2x25	25,4	260	1050	339	107000	M45x1,5	**8051FIL**
SA 45S3x25	25,4	890	3540	339	107000	M45x1,5	**8052FIL**
SA 45x50	50,8	45	180	678	112000	M45x1,5	**8053FIL**
SA 45Sx50	50,8	150	620	678	112000	M45x1,5	**8054FIL**
SA 45S2x50	50,8	520	2090	678	112000	M45x1,5	**8055FIL**
SA 45S3x50	50,8	1800	7100	678	112000	M45x1,5	**8056FIL**
SA 45x75	76,2	70	270	1017	146000	M45x1,5	**8057FIL**
SA 45Sx75	76,2	230	930	1017	146000	M45x1,5	**8058FIL**
SA 45S2x75	76,2	790	3140	1017	146000	M45x1,5	**8059FIL**
SA 45S3x75	76,2	2650	10600	1017	146000	M45x1,5	**8060FIL**
SA 64x50	50,8	140	540	1695	146000	M64x2	**8061FIL**
SA 64Sx50	50,8	460	1850	1695	146000	M64x2	**8062FIL**
SA 64S2x50	50,8	1600	6300	1695	146000	M64x2	**8063FIL**
SA 64S3x50	50,8	5300	21200	1695	146000	M64x2	**8064FIL**
SA 64x100	101,6	270	1100	3390	192000	M64x2	**8065FIL**
SA 64Sx100	101,6	930	3700	3390	192000	M64x2	**8066FIL**
SA 64S2x100	101,6	3150	12600	3390	192000	M64x2	**8067FIL**
SA 64S3x100	101,6	10600	42500	3390	192000	M64x2	**8068FIL**
SA 64x150	150,1	410	1640	5084	248000	M64x2	**8069FIL**
SA 64Sx150	150,1	1390	5600	5084	248000	M64x2	**8070FIL**
SA 64S2x150	150,1	4700	18800	5084	248000	M64x2	**8071FIL**
SA 64S3x150	150,1	16000	63700	5084	248000	M64x2	**8072FIL**

[1)] Option: M14 x 1 thread

Non-Adjustable Shock Absorbers - MC Series

Type	Stroke [mm]	Effective Mass m_e [kg]		Max Energy Absorption [Nm]		Thread Size	Order code
		Min.	Max.	per stroke W_3	per hour W_4		
MC9M1-B	5	0,6	3,2	1	2000	M6 x 0,5	**MC9M1-B**
MC9M2-B	5	0,8	4,1	1	2000	M6 x 0,5	**MC9M2-B**
MC10ML-B	5	0,3	2,7	0,5	4000	M8 x 1	**MC10ML-B**
MC10MH-B	5	0,7	5,0	0,5	4000	M8 x 1	**MC10MH-B**
MC25ML	6,6	0,7	2,2	2,8	22500	M10 x 1	**MC25ML**
MC25M	6,6	1.8	5,4	2,8	22500	M10 x 1	**MC25M**
MC25MH	6,6	4,6	13,6	2,8	22500	M10 x 1	**MC25MH**
MC75M-1	10	0,3	1,1	9	28200	M12 x 1	**MC75M-1**
MC75M-2	10	0,9	4,8	9	28200	M12 x 1	**MC75M-2**
MC75M-3	10	2,7	36,2	9	28200	M12 x 1	**MC75M-3**
MC150M	12,5	0,9	10	17	34000	M14 x 1,5	**MC150M**
MC150MH	12,5	8,6	86	17	34000	M14 x 1,5	**MC150MH**
MC150MH2	12,5	70	200	17	34000	M14 x 1,5	**MC150MH2**
MC225M	12,5	2,3	25	25	45000	M20 x 1,5	**MC225M**
MC225MH	12,5	23	230	25	45000	M20 x 1,5	**MC225MH**
MC225MH2	12,5	180	910	25	45000	M20 x 1,5	**MC225MH2**
MC600M	25,4	9	136	68	68000	M25 x 1,5	**MC600M**
MC600MH	25,4	113	1130	68	68000	M25 x 1,5	**MC600MH**
MC600MH2	25,4	400	2300	68	68000	M25 x 1,5	**MC600MH2**
MC3325M-1	25	9	40	155	75000	M33 x 1,5	**MC3325M-1**
MC3325M-2	25	30	120	155	75000	M33 x 1,5	**MC3325M-2**
MC3325M-3	25	100	420	155	75000	M33 x 1,5	**MC3325M-3**
MC3350M-1	50	18	70	310	85000	M33 x 1,5	**MC3350M-1**
MC3350M-2	50	60	250	310	85000	M33 x 1,5	**MC3350M-2**
MC3350M-3	50	210	840	310	85000	M33 x 1,5	**MC3350M-3**
MC4525M-1	25	20	90	340	107000	M45 x 1,5	**MC4525M-1**
MC4525M-2	25	80	310	340	107000	M45 x 1,5	**MC4525M-2**
MC4525M-3	25	260	1050	340	107000	M45 x 1,5	**MC4525M-3**
MC4550M-1	50	45	180	680	112000	M45 x 1,5	**MC4550M-1**
MC4550M-2	50	150	620	680	112000	M45 x 1,5	**MC4550M-2**
MC4550M-3	50	520	2090	680	112000	M45 x 1,5	**MC4550M-3**
MC4575M-1	75	70	270	1020	146000	M45 x 1,5	**MC4575M-1**
MC4575M-2	75	230	930	1020	146000	M45 x 1,5	**MC4575M-2**
MC4575M-3	75	790	3140	1020	146000	M45 x 1,5	**MC4575M-3**
MC6450M-1	50	140	540	1700	146000	M64 x 2	**MC6450M-1**
MC6450M-2	50	460	1850	1700	146000	M64 x 2	**MC6450M-2**
MC6450M-3	50	1600	6300	1700	146000	M64 x 2	**MC6450M-3**
MC64100M-1	100	270	1100	3400	192000	M64 x 2	**MC64100M-1**
MC64100M-2	100	930	3700	3400	192000	M64 x 2	**MC64100M-2**
MC64100M-3	100	3150	12600	3400	192000	M64 x 2	**MC64100M-3**
MC64150M-1	150	410	1640	5100	248000	M64 x 2	**MC64150M-1**
MC64150M-2	150	1390	5600	5100	248000	M64 x 2	**MC64150M-2**
MC64150M-3	150	4700	18800	5100	248000	M64 x 2	**MC64150M-3**

Non Adjustable Shock Absorbers - SC Series

Type	Stroke [mm]	Effective Mass m_e [kg]				Max Energy Absorption [Nm]		Thread Size	Order code
		Soft contact		Self compensating					
		Min.	Max.	Min.	Max.	per stroke W_3	per hour W_4		
SC925M-1	40	22	72	14	90	110	90000	M25 x 1,5	**SC925M-1**
SC925M-2	40	59	208	40	272	110	90000	M25 x 1,5	**SC925M-2**
SC925M-3	40	181	612	113	726	110	90000	M25 x 1,5	**SC925M-3**

Adjustable Shock Absorbers - SA Series

Type	Stroke [mm]	Effective Mass m_e [kg]		Max Energy Absorption [Nm]		Thread Size	Order code
		Min.	Max.	per stroke W_3	per hour W_4		
SA 1/4 x 1/2N	12,7	1,0	190	20	35000	M20x1,5	**7720FIL**
SA 3/8 x 1D	25,4	4,5	546	70	68000	M25x1,5[2)]	**7840FIL**
SALD 1/2 x 1M	25,4	4,5	1360	170	85000	M36x1,5	**7841FIL**
SALD 1/2 x 2M	50,8	9,5	2720	340	98000	M36x1,5	**7842FIL**
SA 1/2 x 1	25,4	4,5	1225	153	84700	M33x1,5	**7970FIL**
SA 1/2 x 2	50,8	9,5	2450	305	98300	M33x1,5	**7975FIL**
SA 3/4 x 1	25,4	9	8163	339	124300	M42x1,5	**7980FIL**
SA 3/4 x 2	50,8	16	14500	678	146800	M42x1,5	**7985FIL**
SA 3/4 x 3	76	23	20866	1017	180776	M42x1,5	**7986FIL**
SA 1 1/8 x 2	50,8	54	22680	1808	169478	M64x2,0	**7990FIL**
SA 1 1/8 x 4	102	73	45360	3616	225970	M64x2,0	**7995FIL**
SA 1 1/8 x 6	152	91	68040	5423	282463	M64x2,0	**7996FIL**
SA-A 3/4 x 1	25,4	27	3600	290	184000[3)]	M42x1,5	**7887FIL**
SA-A 3/4 x 2	50,8	43	6350	600	230000[3)]	M42x1,5	**7888FIL**
SA-A 3/4 x 3	76	55	9500	890	276000[3)]	M42x1,5	**7889FIL**
SA-A 1 1/8 x 2	50,8	72	13000	1380	345000[3)]	M64x2,0	**7880FIL**
SA-A 1 1/8 x 4	102	118	18200	2700	460000[3)]	M64x2,0	**7885FIL**
SA-A 1 1/8 x 6	152	200	32000	4150	575000[3)]	M64x2,0	**7886FIL**

[2)] Option: M27 x 3 thread [3)] Operation with external air-oil tank

Further shock absorbers sizes (1 1/2", 2", 2 1/4", 3", 4")
in various stroke lengths are also available on request.

For further technical data and accessories information regarding the SA-series please refer to shock absorber catalogue P-A4P018GB, for MC-SC- series please refer to catalogue PDE2524TCUK or contact your local Parker sales company.